Dist	COUNTY	ROUTE	POST MILES TOTAL PROJECT	SHEET No.	TOTAL SHEETS
5	SCR	1	8.1/10.7	782	931

REGISTERED CIVIL ENGINEER DATE

PLANS APPROVAL DATE

REGISTERED PROFESSIONAL ENGINEER — VICTOR ANSON SHERBY — No. 80646 — Exp. 3/31/27 — CIVIL — STATE OF CALIFORNIA

THE STATE OF CALIFORNIA OR ITS OFFICERS OR AGENTS SHALL NOT BE RESPONSIBLE FOR THE ACCURACY OR COMPLETENESS OF SCANNED COPIES OF THIS PLAN SHEET.

SCCRTC
1101 PACIFIC AVE
SANTA CRUZ, CA 95060

MARK THOMAS
701 UNIVERSITY AVE, STE 200
SACRAMENTO, CA 95825

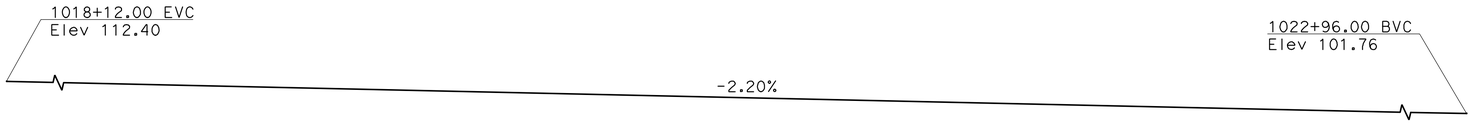

PROFILE GRADE
NO SCALE

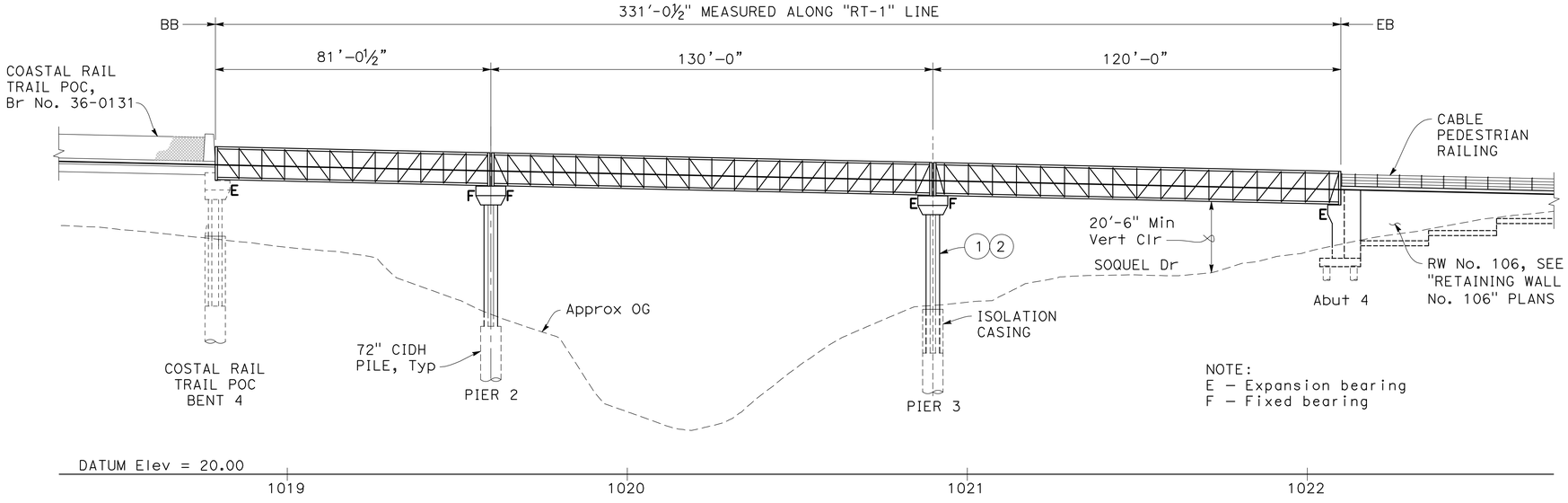

ELEVATION
1" = 20'

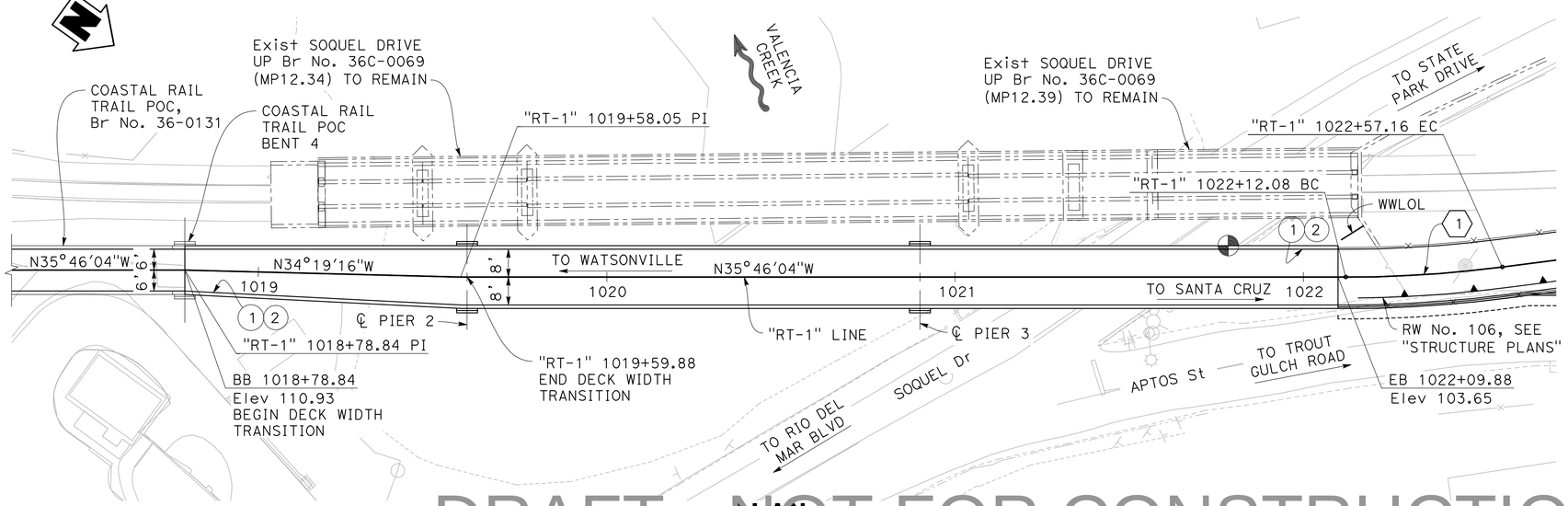

PLAN
1" = 20'

CURVE DATA
(1) "RT-1" LINE
R = 350.0'
Δ = 07°22'49"
T = 22.57'
L = 45.08'

NOTES:

1. For Pile Data Table, see "FOUNDATION PLAN" sheet.
2. For "GENERAL NOTES", "QUANTITIES" and "INDEX TO PLANS", see "INDEX TO PLANS" sheet.

(1) Paint "VALENCIA CREEK PEDESTRIAN BRIDGE"
(2) Paint "BR NO. 36-N/A" & Year Constructed

LEGEND:

———— Existing Bridge

Point of Minimum Vertical Clearance

DRAFT - NOT FOR CONSTRUCTION

DESIGN OVERSIGHT	DESIGN	BY S. RUCKER/V. SHERBY	CHECKED J. YIP	SEISMIC ANALYSIS	BY S. RUCKER/V. SHERBY	CHECKED J. YIP	PREPARED FOR THE STATE OF CALIFORNIA DEPARTMENT OF TRANSPORTATION	M. MOORE PROJECT ENGINEER
SIGN OFF DATE	DETAILS	BY J. VALENZUELA	CHECKED J. YIP	LAYOUT	BY S. RUCKER/V. SHERBY	CHECKED J. YIP		
	QUANTITIES	BY S. RUCKER	CHECKED I. RODRIGUEZ	SPECIFICATIONS	BY M. MOORE	PLANS AND SPECS COMPARED J. HICKEY		

BRIDGE No. N/A — POST MILE N/A

VALENCIA CREEK PEDESTRIAN BRIDGE
GENERAL PLAN (1 OF 2)

STRUCTURES DESIGN GENERAL PLAN SHEET (ENGLISH) (REVISION 2/8/2022)

DATE PLOTTED => 3/11/2025 TIME PLOTTED => 7:00 AM
FILE => 01_Valencia Creek PB_GP1.dwg USERNAME => ETANAKA
ORIGINAL SCALE IN INCHES FOR REDUCED PLANS 0 1 2 3

PROJECT NUMBER & PHASE: 05200000831
COUNTY/ROUTE: SCR/1
CONTRACT No.: 05-0C734

DISREGARD PRINTS BEARING EARLIER REVISION DATES →

REVISION DATES				SHEET	OF
				1	15

Dist	COUNTY	ROUTE	POST MILES TOTAL PROJECT	SHEET No.	TOTAL SHEETS
5	SCR	1	8.1/10.7	###	931

REGISTERED CIVIL ENGINEER DATE

PLANS APPROVAL DATE

REGISTERED PROFESSIONAL ENGINEER — VICTOR ANSON SHERBY — No. 80646 — Exp. 3/31/27 — CIVIL — STATE OF CALIFORNIA

THE STATE OF CALIFORNIA OR ITS OFFICERS OR AGENTS SHALL NOT BE RESPONSIBLE FOR THE ACCURACY OR COMPLETENESS OF SCANNED COPIES OF THIS PLAN SHEET.

SCCRTC
1101 PACIFIC AVE
SANTA CRUZ, CA 95060

MARK THOMAS
701 UNIVERSITY AVE, STE 200
SACRAMENTO, CA 95825

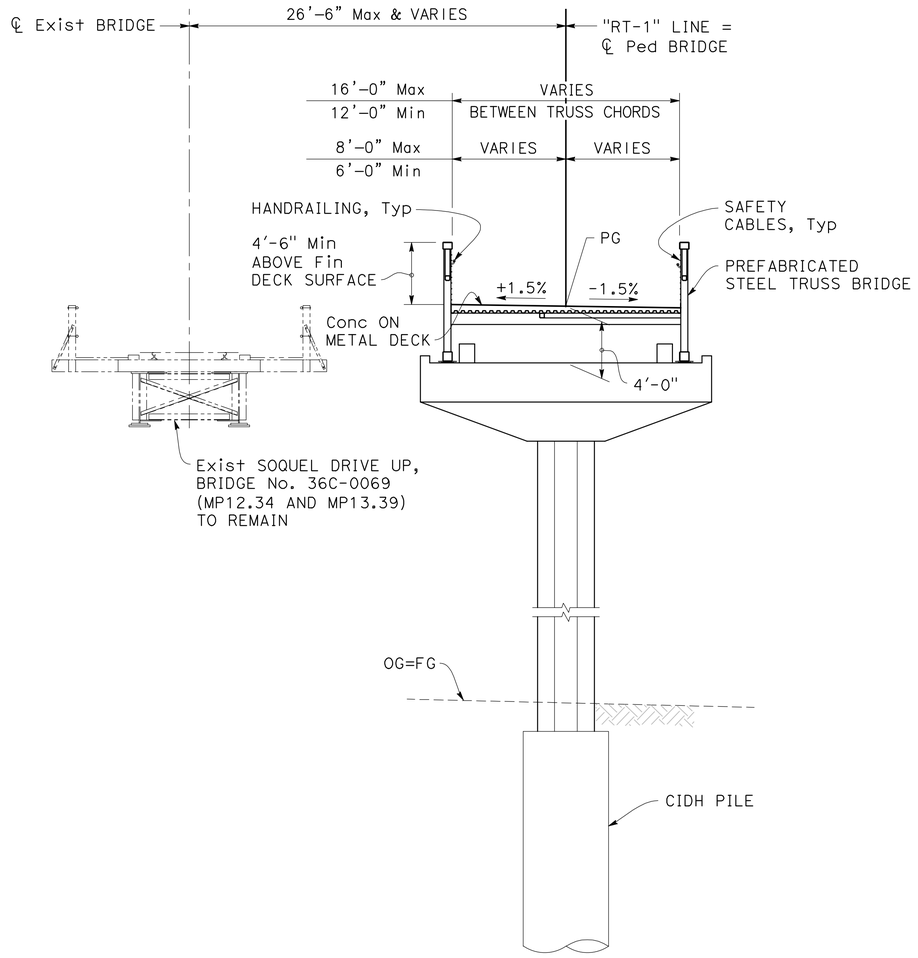

SPAN 1 AT PIER 2

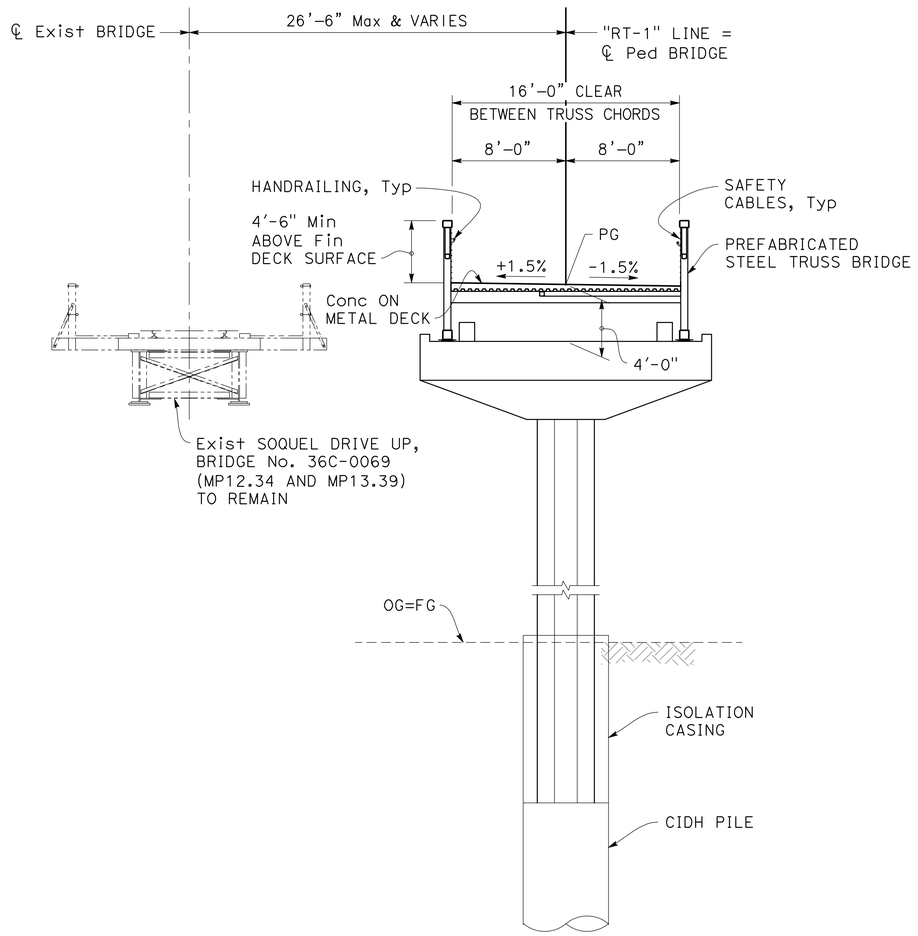

SPAN 2 & 3 AT PIER 3

LEGEND:

——— Existing Bridge

TYPICAL SECTION

3/16" = 1'-0"

DRAFT - NOT FOR CONSTRUCTION

DESIGN OVERSIGHT	DESIGN	BY S. RUCKER/V. SHERBY	CHECKED J. YIP	SEISMIC ANALYSIS	BY S. RUCKER/V. SHERBY	CHECKED J. YIP	PREPARED FOR THE STATE OF CALIFORNIA DEPARTMENT OF TRANSPORTATION	M. MOORE PROJECT ENGINEER	BRIDGE No. N/A	VALENCIA CREEK PEDESTRIAN BRIDGE
SIGN OFF DATE	DETAILS	BY J. VALENZUELA	CHECKED J. YIP	LAYOUT	BY S. RUCKER/V. SHERBY	CHECKED J. YIP			POST MILE N/A	GENERAL PLAN (2 OF 2)
	QUANTITIES	BY S. RUCKER	CHECKED I. RODRIGUEZ	SPECIFICATIONS	BY M. MOORE	PLANS AND SPECS COMPARED J. HICKEY				

STRUCTURES DESIGN GENERAL PLAN SHEET (ENGLISH) (REVISION 2/8/2022)

DATE PLOTTED => 3/10/2025 TIME PLOTTED => 11:59 AM
FILE => 02_Valencia Creek PB_GP2.dwg USERNAME => ETANAKA

ORIGINAL SCALE IN INCHES FOR REDUCED PLANS 0 1 2 3

PROJECT NUMBER & PHASE:05200000831 COUNTY/ROUTE:SCR/1 CONTRACT No.:05-0C734

DISREGARD PRINTS BEARING EARLIER REVISION DATES

REVISION DATES				SHEET	OF
				2	15

Dist	COUNTY	ROUTE	POST MILES TOTAL PROJECT	SHEET No.	TOTAL SHEETS
5	SCR	1	8.1/10.7	###	931

REGISTERED CIVIL ENGINEER DATE

PLANS APPROVAL DATE

REGISTERED PROFESSIONAL ENGINEER — VICTOR ANSON SHERBY — No. 80646 — Exp. 3/31/27 — CIVIL — STATE OF CALIFORNIA

THE STATE OF CALIFORNIA OR ITS OFFICERS OR AGENTS SHALL NOT BE RESPONSIBLE FOR THE ACCURACY OR COMPLETENESS OF SCANNED COPIES OF THIS PLAN SHEET.

SCCRTC
1101 PACIFIC AVE
SANTA CRUZ, CA 95060

MARK THOMAS
701 UNIVERSITY AVE, STE 200
SACRAMENTO, CA 95825

GENERAL NOTES
LOAD AND RESISTANCE FACTOR DESIGN

DESIGN:

AASHTO LRFD Bridge Design Specifications, 2019 Edition with California Amendments, preface date April 2019

AASHTO LRFD Guide Specification for Design of Pedestrian Bridges, 2009 Edition dated December 2009

Standard Plans and Specifications, 2023 Edition with Revised Plans, dated January 2024

Structural Technical Policies as of March, 2023

SEISMIC DESIGN:

Caltrans Seismic Design Criteria (SDC), Version 2.0 dated April 2019

DEAD LOAD:

Maximum truss DL including deck must not exceed
- 104.4 kips for Span 1 (81′-½")
- 219.6 kips for Span 2 (150 ft)
- 118.4 kips for Span 3 (100 ft)

LIVE LOADING:

H10 & 90 psf pedestrian load

SEISMIC LOADING:

Soil Profile : Vs30 = 220 m/s (722 ft/s)
Moment Magnitude : 6.98
Peak Ground Acceleration : 0.7g
See "ARS CURVE"

CONCRETE:

fy = 60 ksi
f′c = 3.6 ksi unless otherwise noted
n = 8

STRUCTURAL STEEL:

Prefabricated Steel Truss : ASTM A500, GRADE C (Fy=50ksi) GALVANIZED, NATINA STAINED

SOIL PARAMETERS:

Lightweight Cellular Concrete Fill (LCC)
- Class: II
- Cast Density: 36 pcf
- Compressive Strength @ 28 days = 80 psi

PILES:

See "PILE DATA TABLE" on "FOUNDATION PLAN" sheet.

QUANTITIES

STRUCTURE EXCAVATION (BRIDGE)	107	CY
STRUCTURE BACKFILL (BRIDGE)	50	CY
LIGHTWEIGHT CELLULAR CONCRETE FILL	46	CY
24" CAST-IN-DRILLED-HOLE CONCRETE PILING	234	LF
72" CAST-IN-DRILLED-HOLE CONCRETE PILING	90	LF
STRUCTURAL CONCRETE, BRIDGE	428	CY
BAR REINFORCING STEEL (BRIDGE)	41,936	LB
FURNISH PREFABRICATED STEEL TRUSS (81′-½")	1	EA
FURNISH PREFABRICATED STEEL TRUSS (100′)	1	EA
FURNISH PREFABRICATED STEEL TRUSS (150′)	1	EA
ERECT PREFABRICATED STEEL TRUSS (81′-½")	1	EA
ERECT PREFABRICATED STEEL TRUSS (100′)	1	EA
ERECT PREFABRICATED STEEL TRUSS (150′)	1	EA
ISOLATION CASING	2,209	LB
MISCELLANEOUS METAL (BRIDGE)	1,676	LB
CABLE PEDESTRIAN RAILING (TYPE 2)	12	LF

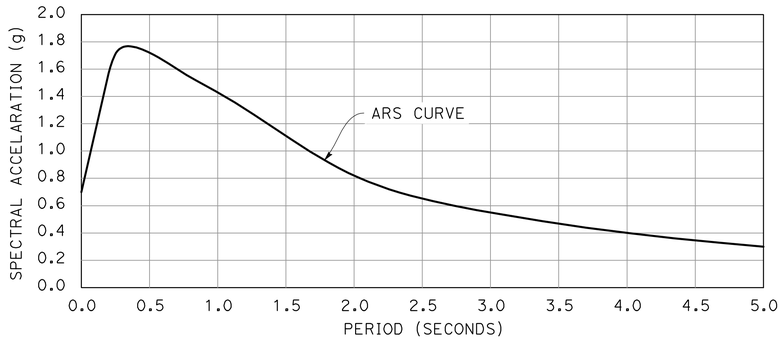

ARS CURVE
5% DAMPING

INDEX TO PLANS

SHEET	TITLE
1	GENERAL PLAN (1 OF 2)
2	GENERAL PLAN (2 OF 2)
3	INDEX TO PLANS
4	FOUNDATION PLAN
5	ABUTMENT 4 LAYOUT
6	ABUTMENT DETAILS
7	ABUTMENT DRAINAGE DETAILS
8	PIER LAYOUT AND DETAILS
9	ISOLATION CASING DETAILS
10	JOINT CLOSURE PLATE DETAILS
11	PEDESTRIAN SLAB DETAILS
12	CABLE PEDESTRIAN RAILING (TYPE 2) DETAILS No. 1
13	CABLE PEDESTRIAN RAILING (TYPE 2) DETAILS No. 2
14	LOG OF TEST BORING 1 OF 2
15	LOG OF TEST BORING 2 OF 2

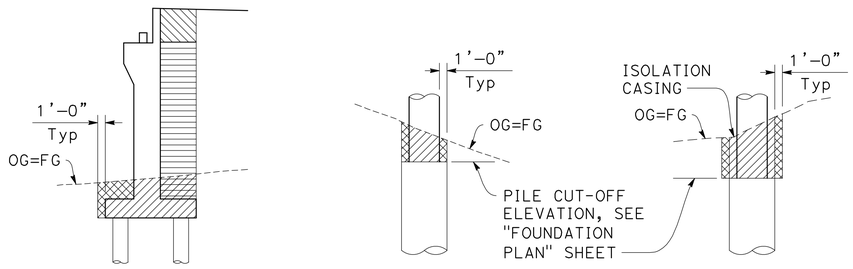

LIMITS OF PAYMENT FOR STRUCTURE EXCAVATION AND BACKFILL
NO SCALE

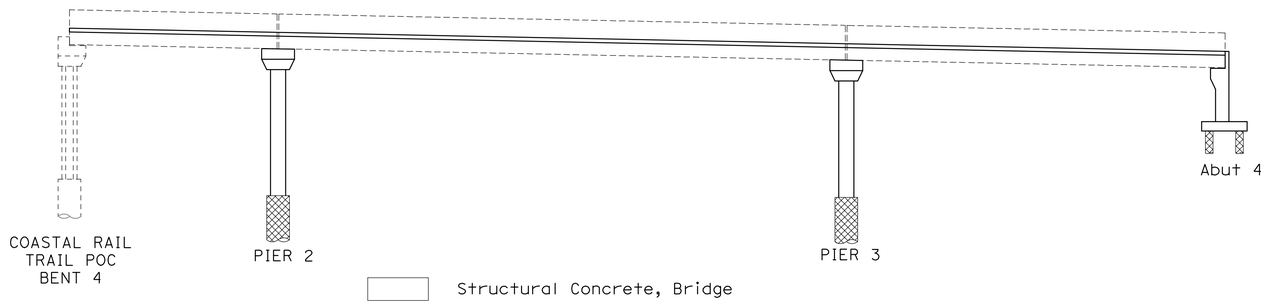

CONCRETE STRENGTH AND TYPE LIMITS
NO SCALE

DRAFT - NOT FOR CONSTRUCTION

THE CONTRACTOR SHALL VERIFY ALL CONTROLLING FIELD DIMENSIONS BEFORE ORDERING OR FABRICATING ANY MATERIAL.

DESIGN OVERSIGHT

SIGN OFF DATE

	BY	CHECKED
DESIGN	S. RUCKER/V. SHERBY	J. YIP
DETAILS	M. BILLINGS	J. YIP
QUANTITIES	S. RUCKER	I. RODRIGUEZ

PREPARED FOR THE STATE OF CALIFORNIA DEPARTMENT OF TRANSPORTATION

M. MOORE
PROJECT ENGINEER

BRIDGE NO. N/A
POST MILE N/A

VALENCIA CREEK PEDESTRIAN BRIDGE
INDEX TO PLANS

STRUCTURES DESIGN DETAIL SHEET (ENGLISH) (REVISION 8/16/2021)

DATE PLOTTED => 3/10/2025 TIME PLOTTED => 11:59 AM
FILE => 03_Valencia Creek PB_ITP.dwg USERNAME => ETANAKA

ORIGINAL SCALE IN INCHES FOR REDUCED PLANS 0 1 2 3

PROJECT NUMBER & PHASE: 05200000831
COUNTY/ROUTE: SCR/1
CONTRACT No.: 05-0C734

DISREGARD PRINTS BEARING EARLIER REVISION DATES →

REVISION DATES					SHEET	OF
					3	15

Dist	COUNTY	ROUTE	POST MILES TOTAL PROJECT	SHEET No.	TOTAL SHEETS
5	SCR	1	8.1/10.7	785	931

REGISTERED CIVIL ENGINEER DATE

PLANS APPROVAL DATE

REGISTERED PROFESSIONAL ENGINEER — VICTOR ANSON SHERBY — No. 80646 — Exp. 3/31/27 — CIVIL — STATE OF CALIFORNIA

THE STATE OF CALIFORNIA OR ITS OFFICERS OR AGENTS SHALL NOT BE RESPONSIBLE FOR THE ACCURACY OR COMPLETENESS OF SCANNED COPIES OF THIS PLAN SHEET.

SCCRTC
1101 PACIFIC AVE
SANTA CRUZ, CA 95060

MARK THOMAS
701 UNIVERSITY AVE, STE 200
SACRAMENTO, CA 95825

PILE DATA TABLE

Location	Pile Type	Nominal Resistance (kips)		Cut-off Elevations (ft)	Design Tip Elevations (ft)	Specified Tip Elevations (ft)
		Compression	Tension			
PIER 2	72" CIDH	1050	-	63.50	(a)12.5 (c)46.0 (d)27.50	10.50
PIER 3	72" CIDH	1150	-	61.56	(a)26.5 (c)45.0 (d)29.16	24.50
Abut 4	24" CIDH	230	-	81.25	(a)44.25 (c)61.0 (d)73.75	42.25

Notes:
1. Design Tip Elevation for abutments are controlled by: (a) Compression, (b) Tension, (c) Settlement, (d) Lateral.
2. Specified Tip Elevation is lowered by 2 ft from the Design Tip Elevation to account for untested zone for CIDH piles per Caltrans Geotech Manual (CIDH Module).

BENCHMARK AND DATUM

MONUMENT	COORDINATES		ELEVATION	DESCRIPTION/LOCATION
	NORTH	EAST		
6	1 815 851	6 155 598	144.3	MAG NAIL & SHRINER
7	1 816 418	6 152 305	53.8	MAG NAIL & SHRINER

HYDROLOGIC SUMMARY

Drainage Area: 12.1 Square Miles

Frequency	Design Flood	Base Flood	Flood of Record
	50-Year	100-Year	N/A
Discharge (cubic feet per second)	N/A	2690 cfs	N/A
Water Surface Elev AT Bridge (feet)	N/A	35 ft	N/A

Flood plain data is based upon information available when the plans were prepared and is shown to meet federal requirements. The accuracy of said information is not warranted by Caltrans and interested or affected parties should make their own investigation

SCOUR DATA TABLE

SUPPORT LOCATION	LONG TERM (Degradation and Contraction) SCOUR Elev (ft)	Short Term (Local) Scour Depth (ft)
Abut 4	N/A	N/A
Bent 2	N/A	N/A
Bent 3	N/A	N/A

LEGEND:
- Existing Bridge
- New Construction
- ◯ 72" CIDH Piling
- ○ 24" CIDH Piling
- XX.X Bottom of Footing Elevation

UTILITIES:
1. 10" Sewer
2. Abandoned 10" Sewer
3. AT&T UG
4. AT&T UG
5. PG&E 6" Distribution Main Gas Line
6. 10" Sewer
7. PG&E 10" Transmission Main Gas Line
8. PG&E 4.16kV Primary Voltage OH, TO BE RELOCATED (BY OTHERS)
9. AT&T OH
10. AT&T UG

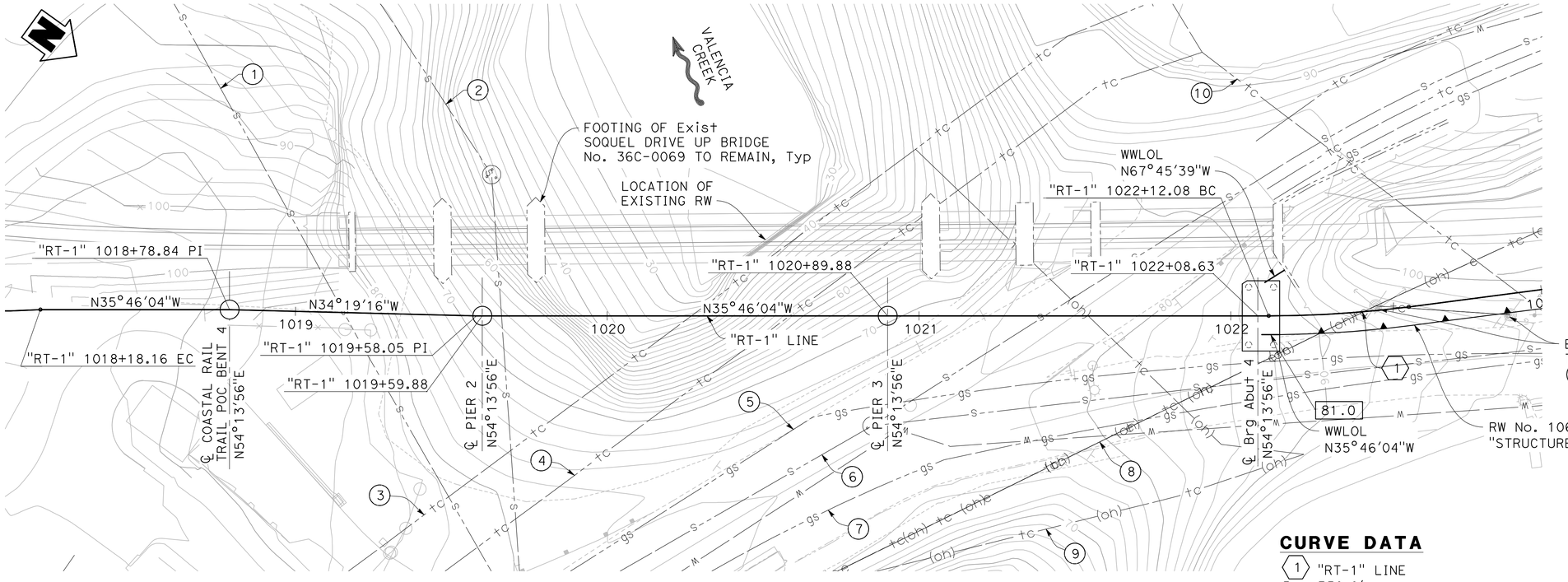

CURVE DATA

(1) "RT-1" LINE
R = 350.0'
Δ = 07°22'19"
T = 22.57'
L = 45.08'

DRAFT - NOT FOR CONSTRUCTION

DESIGN OVERSIGHT	SCALE: 1" = 20'	VERT.DATUM NAVD 88	HORZ.DATUM NAD 83	DESIGN	BY S. RUCKER/V. SHERBY	CHECKED J. YIP	PREPARED FOR THE STATE OF CALIFORNIA DEPARTMENT OF TRANSPORTATION	M. MOORE PROJECT ENGINEER	BRIDGE No. N/A	VALENCIA CREEK PEDESTRIAN BRIDGE
SIGN OFF DATE	PHOTOGRAMMETRY AS OF: X	ALIGNMENT TIES:X		DETAILS	BY J. VALENZUELA	CHECKED J. YIP			POST MILE N/A	FOUNDATION PLAN
STRUCTURES FOUNDATION PLAN SHEET (ENGLISH) (REVISION 8/16/2021)	SURVEYED BY X	DRAFTED BY X		QUANTITIES	BY S. RUCKER	CHECKED I. RODRIGUEZ				
	FIELD CHECKED BY X	CHECKED BY X								

DATE PLOTTED => 3/11/2025 TIME PLOTTED => 6:36 AM
FILE => 04_Valencia Creek PB_FP.dwg USERNAME => ETANAKA
ORIGINAL SCALE IN INCHES FOR REDUCED PLANS 0 1 2 3

PROJECT NUMBER & PHASE:05200000831 COUNTY/ROUTE:SCR/1 CONTRACT No.:05-0C734

DISREGARD PRINTS BEARING EARLIER REVISION DATES

REVISION DATES				SHEET	OF
				4	15

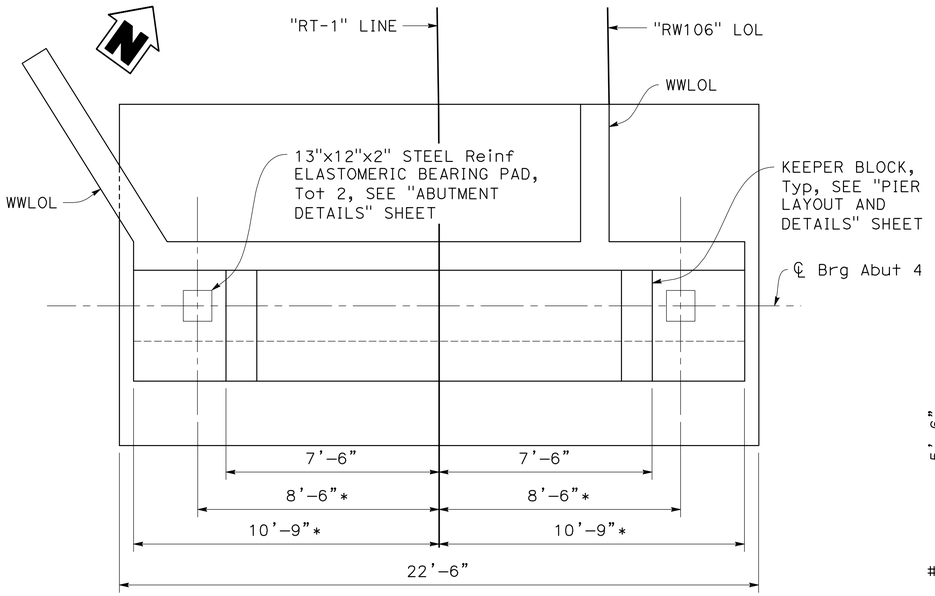

ABUTMENT 4 PLAN

3/8" = 1'-0"

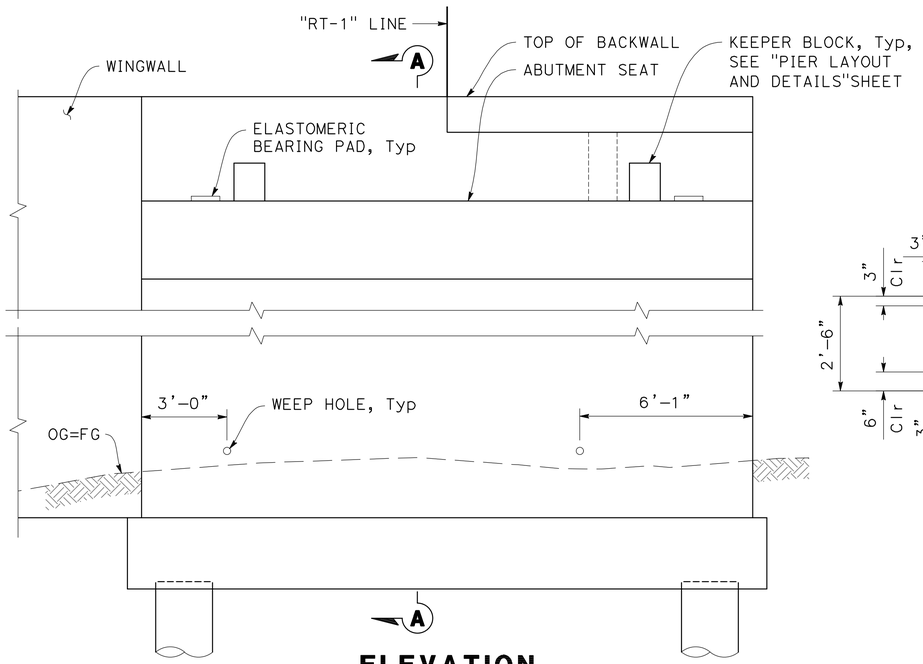

ELEVATION

3/8" = 1'-0"

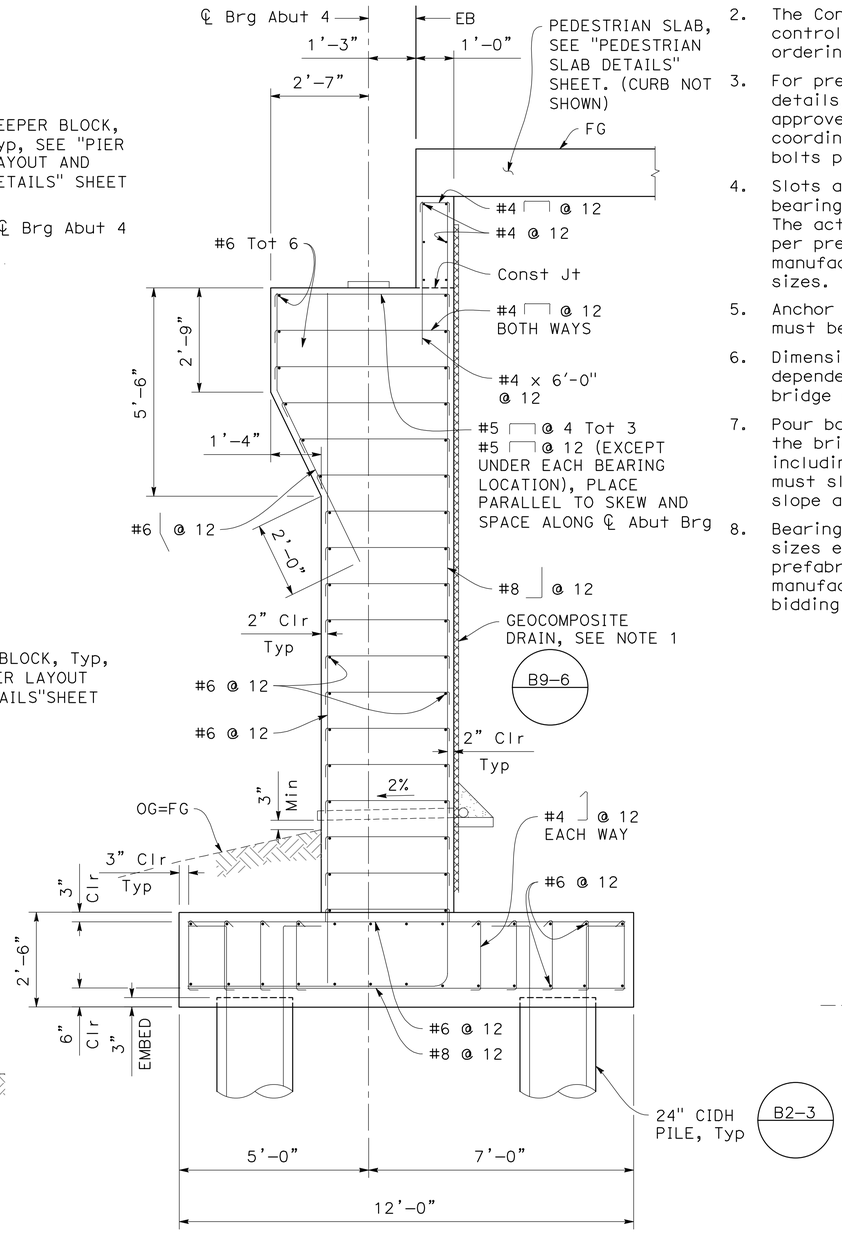

SECTION A-A

1 1/2" = 1'-0"

NOTE: Keeper block not shown.

NOTES:

1. For Abutment drainage, see "ABUTMENT DRAINAGE DETAILS" sheet.
2. The Contractor shall verify all controlling field dimensions before ordering or fabricating any material.
3. For prefabricated steel truss bridge details, see truss manufacturer's approved drawings. Contractor must coordinate, supply and install anchor bolts per truss manufacturer's plans.
4. Slots and holes in bearing plates and bearings are shown for 1"ϕ anchor bolts. The actual holes and slot sizes must be per prefabricated steel truss bridge manufacturer's designed anchor bolt sizes.
5. Anchor bolts, washers, nuts and lock nuts must be weathering steel.
6. Dimensions marked with (*) will be dependent upon prefabricated steel truss bridge manufacturer's approved drawings.
7. Pour backwall concrete after leveling of the bridge is completed. Top of backwall including "Joint Closure Plate" assembly must slope to conform with the deck slope and profile grade.
8. Bearing plates, bearing pads, anchor bolt sizes etc, must be determined by the prefabricated steel truss bridge manufacturer. Details shown are for bidding purposes only.

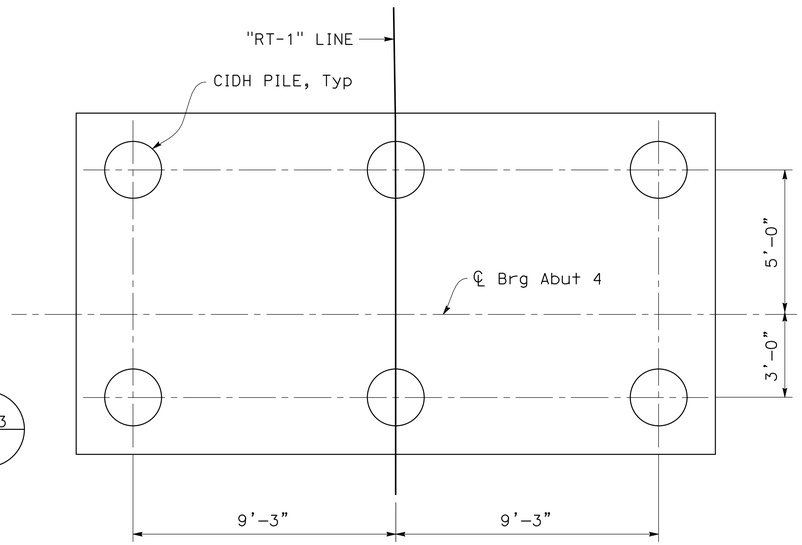

FOOTING PLAN

3/8" = 1'-0"

DRAFT - NOT FOR CONSTRUCTION

THE CONTRACTOR SHALL VERIFY ALL CONTROLLING FIELD DIMENSIONS BEFORE ORDERING OR FABRICATING ANY MATERIAL.

Dist	COUNTY	ROUTE	POST MILES TOTAL PROJECT	SHEET No.	TOTAL SHEETS
5	SCR	1	8.1/10.7	###	931

REGISTERED CIVIL ENGINEER DATE

PLANS APPROVAL DATE

REGISTERED PROFESSIONAL ENGINEER — VICTOR ANSON SHERBY — No. 80646 — Exp. 3/31/27 — CIVIL — STATE OF CALIFORNIA

THE STATE OF CALIFORNIA OR ITS OFFICERS OR AGENTS SHALL NOT BE RESPONSIBLE FOR THE ACCURACY OR COMPLETENESS OF SCANNED COPIES OF THIS PLAN SHEET.

SCCRTC
1101 PACIFIC AVE
SANTA CRUZ, CA 95060

MARK THOMAS
701 UNIVERSITY AVE, STE 200
SACRAMENTO, CA 95825

DESIGN OVERSIGHT

SIGN OFF DATE

	BY	CHECKED
DESIGN	S. RUCKER/V. SHERBY	J. YIP
DETAILS	M. BILLINGS	J. YIP
QUANTITIES	S. RUCKER	I. RODRIGUEZ

PREPARED FOR THE STATE OF CALIFORNIA DEPARTMENT OF TRANSPORTATION

M. MOORE
PROJECT ENGINEER

BRIDGE No. N/A
POST MILE N/A

VALENCIA CREEK PEDESTRIAN BRIDGE

ABUTMENT 4 LAYOUT

STRUCTURES DESIGN DETAIL SHEET (ENGLISH) (REVISION 8/16/2021)

DATE PLOTTED => 3/10/2025 TIME PLOTTED => 11:57 AM
FILE => 05_Valencia Creek PB_A4L.dwg USERNAME => ETANAKA

ORIGINAL SCALE IN INCHES FOR REDUCED PLANS 0 1 2 3

PROJECT NUMBER & PHASE: 05200000831 COUNTY/ROUTE: SCR/1 CONTRACT No.: 05-0C734

DISREGARD PRINTS BEARING EARLIER REVISION DATES →

REVISION DATES

SHEET 5 OF 15

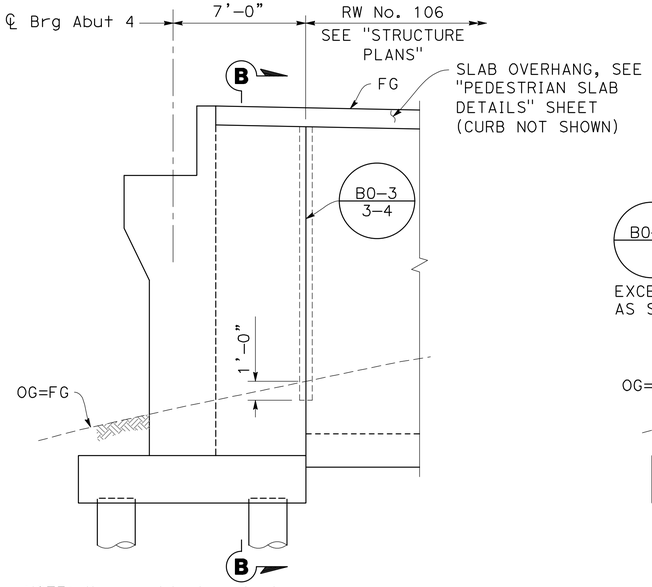

NOTE: Keeper block not shown.

ELEVATION
ABUTMENT 4 RETURN WALL
1/4" = 1'-0"

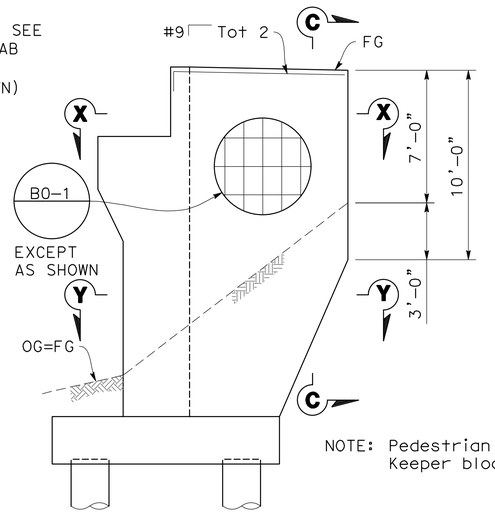

NOTE: Pedestrian slab and Keeper block not shown.

ELEVATION
ABUTMENT 4 WINGWALL
1/4" = 1'-0"

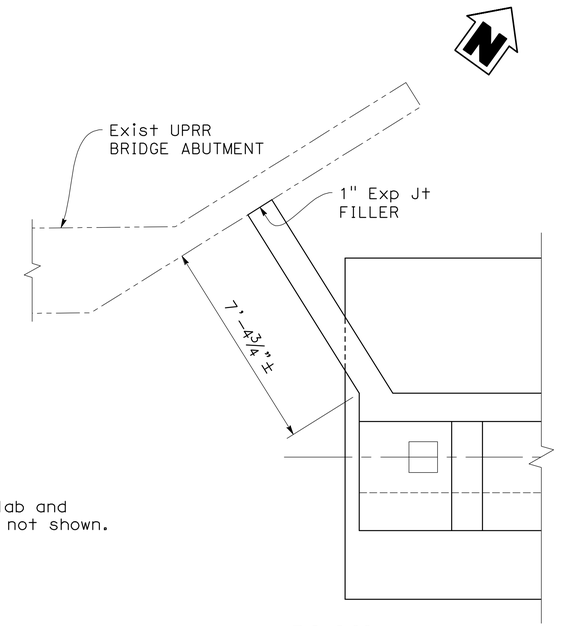

PLAN
ABUTMENT 4 WINGWALL
3/8" = 1'-0"

Dist	COUNTY	ROUTE	POST MILES TOTAL PROJECT	SHEET No.	TOTAL SHEETS
5	SCR	1	8.1/10.7	###	931

REGISTERED CIVIL ENGINEER DATE

PLANS APPROVAL DATE

REGISTERED PROFESSIONAL ENGINEER — VICTOR ANSON SHERBY — No. 80646 — Exp. 3/31/27 — CIVIL — STATE OF CALIFORNIA

THE STATE OF CALIFORNIA OR ITS OFFICERS OR AGENTS SHALL NOT BE RESPONSIBLE FOR THE ACCURACY OR COMPLETENESS OF SCANNED COPIES OF THIS PLAN SHEET.

SCCRTC
1101 PACIFIC AVE
SANTA CRUZ, CA 95060

MARK THOMAS
701 UNIVERSITY AVE, STE 200
SACRAMENTO, CA 95825

NOTES:

1. For Abutment drainage, see "ABUTMENT DRAINAGE DETAILS" sheet.
2. Slots and holes in bearing plates are shown for 1½" diameter anchor bolts. The actual holes and slot sizes must be per prefabricated steel truss bridge manufacturer's designed anchor bolt sizes.
3. Bearing plates, bearing pads, anchor bolt sizes, etc. must be determined by the prefabricated truss manufacturer. Details shown are for bidding purposes only.
4. Epoxy bond bearing pad and joint filler to the seat. Apply light coat of commercial quality grease to top of bearing pad at expansion bearing only.
5. Bridge manufacturer to supply and install load limitation plaque on bridge.

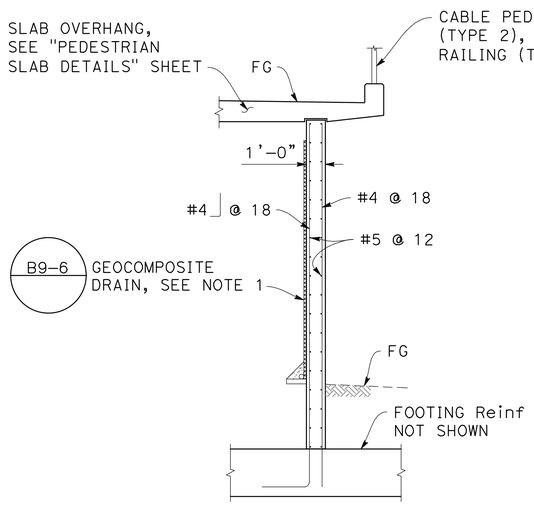

SECTION B-B
1/4" = 1'-0"

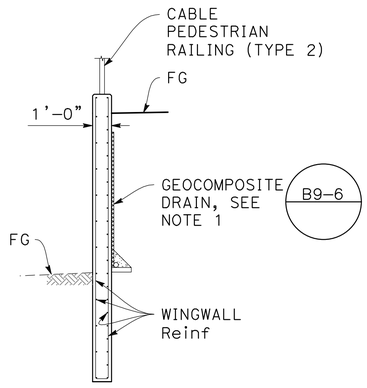

SECTION C-C
1/4" = 1'-0"

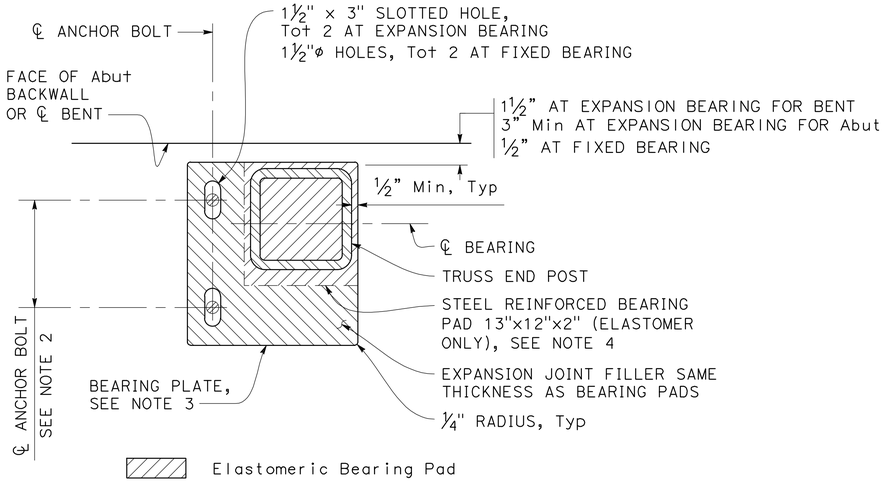

BEARING PLATE DETAIL
NO SCALE

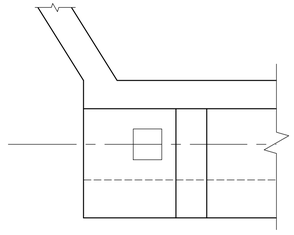

SECTION X-X
3/8" = 1'-0"

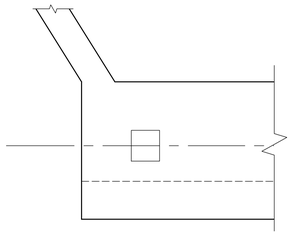

SECTION Y-Y
3/8" = 1'-0"

DRAFT - NOT FOR CONSTRUCTION

THE CONTRACTOR SHALL VERIFY ALL CONTROLLING FIELD DIMENSIONS BEFORE ORDERING OR FABRICATING ANY MATERIAL.

DESIGN OVERSIGHT

SIGN OFF DATE

	BY	CHECKED
DESIGN	S. RUCKER/V. SHERBY	J. YIP
DETAILS	M. BILLINGS	J. YIP
QUANTITIES	S. RUCKER	I. RODRIGUEZ

PREPARED FOR THE STATE OF CALIFORNIA DEPARTMENT OF TRANSPORTATION

M. MOORE
PROJECT ENGINEER

BRIDGE No. N/A
POST MILE N/A

VALENCIA CREEK PEDESTRIAN BRIDGE
ABUTMENT DETAILS

STRUCTURES DESIGN DETAIL SHEET (ENGLISH) (REVISION 8/16/2021)

DATE PLOTTED => 3/10/2025 TIME PLOTTED => 11:59 AM
FILE => 06_Valencia Creek PB_ADT.dwg USERNAME => ETANAKA

ORIGINAL SCALE IN INCHES FOR REDUCED PLANS 0 1 2 3

PROJECT NUMBER & PHASE: 05200000831
COUNTY/ROUTE: SCR/1
CONTRACT No.: 05-0C734

DISREGARD PRINTS BEARING EARLIER REVISION DATES →

REVISION DATES

SHEET 6 OF 15

Dist	COUNTY	ROUTE	POST MILES TOTAL PROJECT	SHEET No.	TOTAL SHEETS
5	SCR	1	8.1/10.7	###	931

REGISTERED CIVIL ENGINEER DATE

PLANS APPROVAL DATE

REGISTERED PROFESSIONAL ENGINEER
VICTOR ANSON SHERBY
No. 80646
Exp. 3/31/27
CIVIL
STATE OF CALIFORNIA

THE STATE OF CALIFORNIA OR ITS OFFICERS OR AGENTS SHALL NOT BE RESPONSIBLE FOR THE ACCURACY OR COMPLETENESS OF SCANNED COPIES OF THIS PLAN SHEET.

SCCRTC
1101 PACIFIC AVE
SANTA CRUZ, CA 95060

MARK THOMAS
701 UNIVERSITY AVE, STE 200
SACRAMENTO, CA 95825

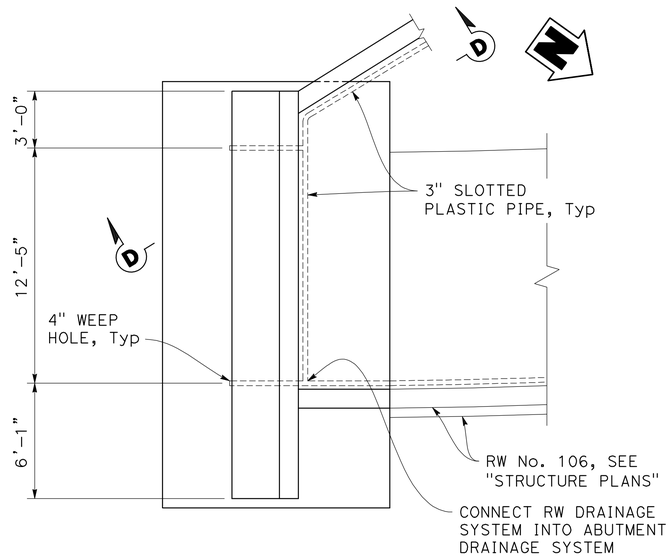

DRAINAGE PLAN - ABUTMENT 4

1/4" = 1'-0"

NOTE: Keeper block not shown.

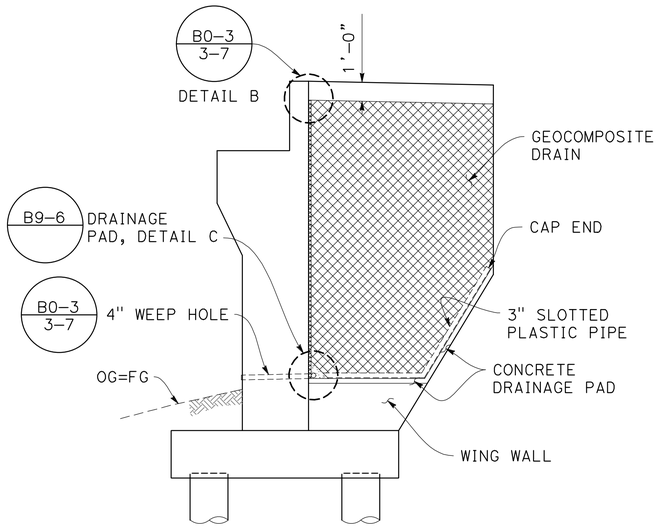

SECTION D-D

1/2" = 1'-0"

NOTE: Keeper block not shown.

DRAFT - NOT FOR CONSTRUCTION

NOTES:

1. For drainage details not shown, see Details 3-7 on Standard Plan B0-3.

THE CONTRACTOR SHALL VERIFY ALL CONTROLLING FIELD DIMENSIONS BEFORE ORDERING OR FABRICATING ANY MATERIAL.

DESIGN OVERSIGHT

SIGN OFF DATE

	BY	CHECKED
DESIGN	S. RUCKER/V. SHERBY	J. YIP
DETAILS	M. BILLINGS	J. YIP
QUANTITIES	S. RUCKER	I. RODRIGUEZ

PREPARED FOR THE
STATE OF CALIFORNIA
DEPARTMENT OF TRANSPORTATION

M. MOORE
PROJECT ENGINEER

BRIDGE No. N/A
POST MILE N/A

VALENCIA CREEK PEDESTRIAN BRIDGE
ABUTMENT DRAINAGE DETAILS

STRUCTURES DESIGN DETAIL SHEET
(ENGLISH) (REVISION 8/16/2021)

DATE PLOTTED => 3/10/2025 TIME PLOTTED => 12:00 PM
FILE => 07_Valencia Creek PB_ADD.dwg USERNAME => ETANAKA

ORIGINAL SCALE IN INCHES FOR REDUCED PLANS 0 1 2 3

PROJECT NUMBER & PHASE: 05200000831
COUNTY/ROUTE: SCR/1
CONTRACT No.: 05-0C734

DISREGARD PRINTS BEARING EARLIER REVISION DATES

REVISION DATES				SHEET	OF
				7	15

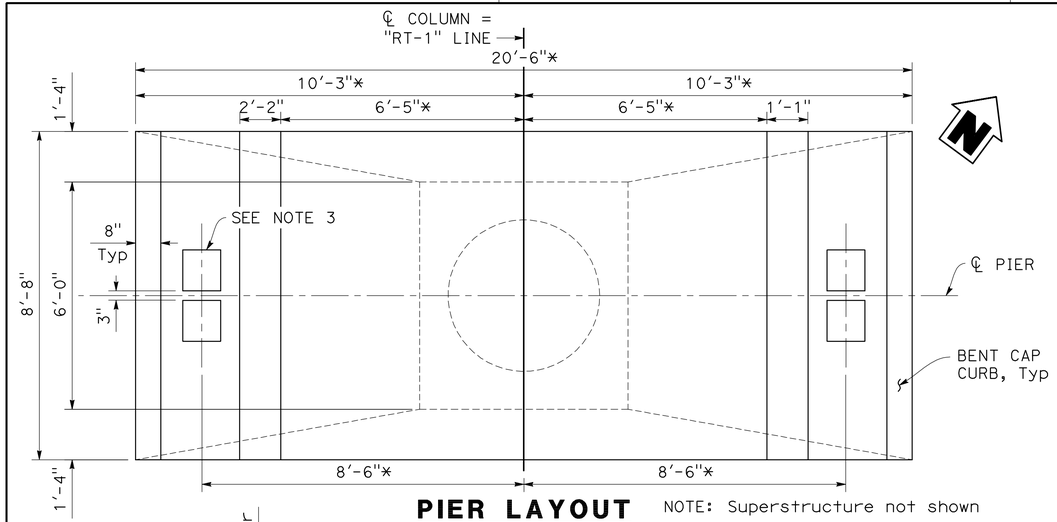

PIER LAYOUT

1/2" = 1'-0"

NOTE: Superstructure not shown

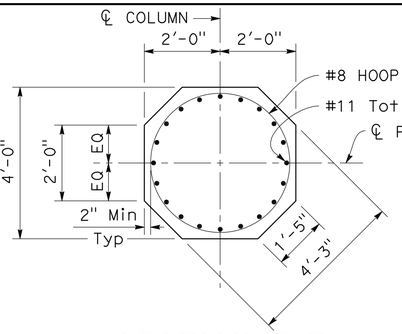

SECTION E-E

1/2" = 1'-0"

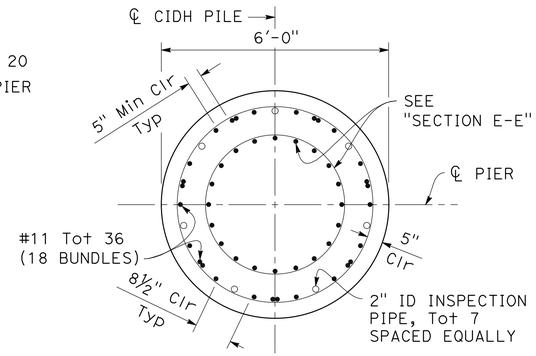

SECTION F-F

1/2" = 1'-0"

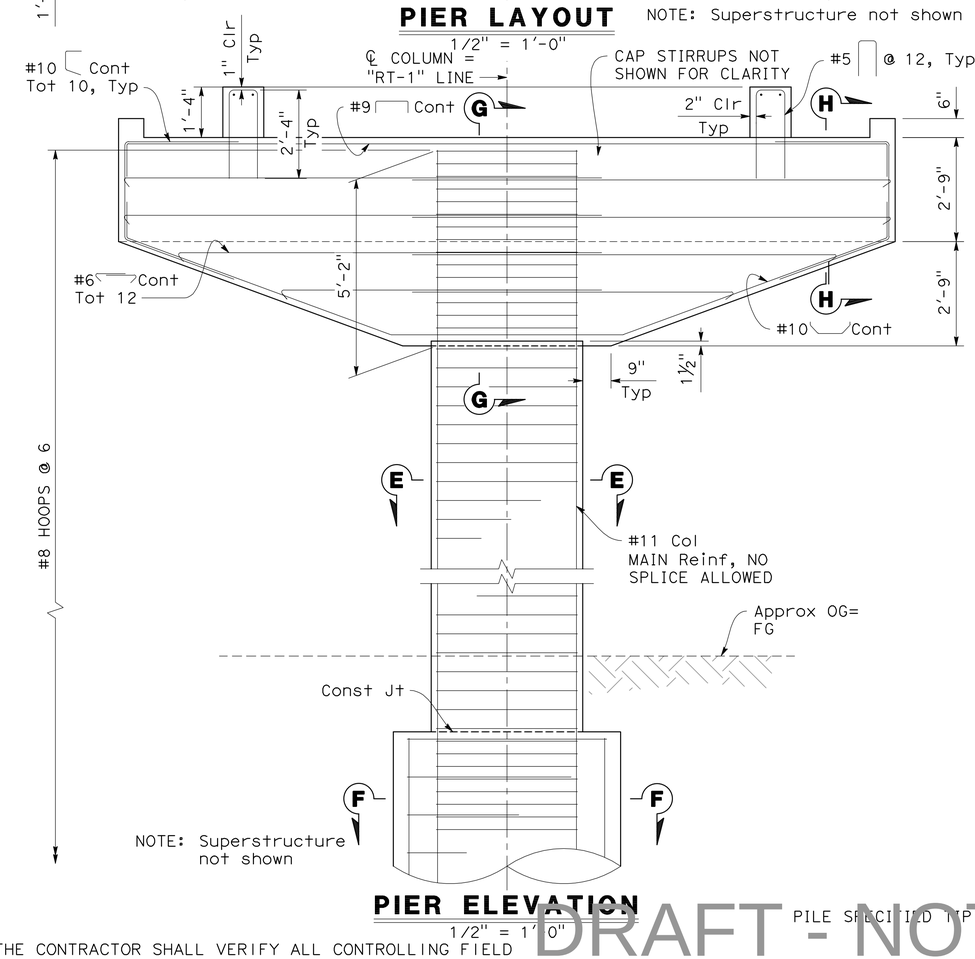

PIER ELEVATION

1/2" = 1'-0"

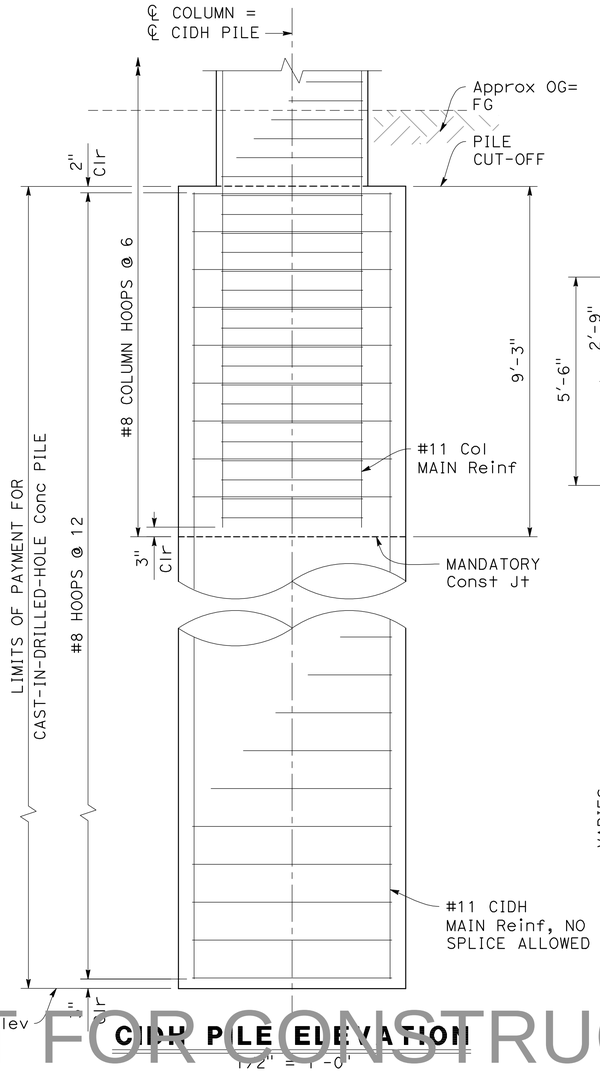

CIDH PILE ELEVATION

1/2" = 1'-0"

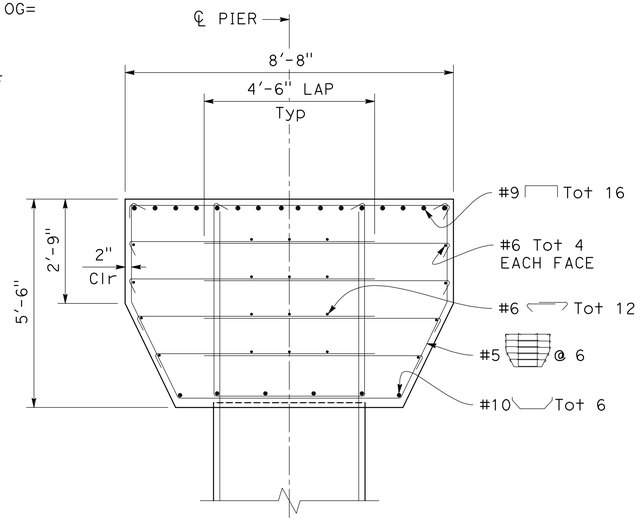

SECTION G-G

1/2" = 1'-0"

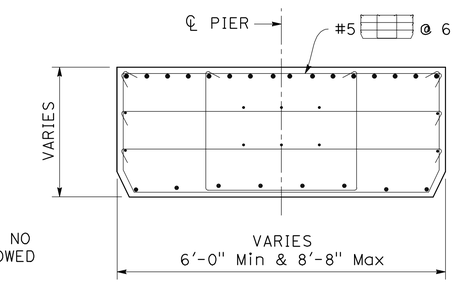

NOTE: For details not shown, see "SECTION G-G".

SECTION H-H

1/2" = 1'-0"

NOTES:

1. Pier 2 shown, Pier 3 similar.
2. All hoops must be ultimate butt spliced.
3. For "BEARING PLATE DETAIL", see "ABUTMENT DETAILS" sheet.
4. Dimensions marked with (*) may change per prefabricated steel truss manufacturer drawing.
5. Contractor must verify all controlling field dimensions before ordering or fabricating any material.
6. For pile specified tip elevations and cut-off elevations, see "FOUNDATION PLAN" sheet.

THE CONTRACTOR SHALL VERIFY ALL CONTROLLING FIELD DIMENSIONS BEFORE ORDERING OR FABRICATING ANY MATERIAL.

DRAFT - NOT FOR CONSTRUCTION

Dist	COUNTY	ROUTE	POST MILES TOTAL PROJECT	SHEET No.	TOTAL SHEETS
5	SCR	1	8.1/10.7	###	931

REGISTERED CIVIL ENGINEER DATE

PLANS APPROVAL DATE

REGISTERED PROFESSIONAL ENGINEER — VICTOR ANSON SHERBY — No. 80646 — Exp. 3/31/27 — CIVIL — STATE OF CALIFORNIA

THE STATE OF CALIFORNIA OR ITS OFFICERS OR AGENTS SHALL NOT BE RESPONSIBLE FOR THE ACCURACY OR COMPLETENESS OF SCANNED COPIES OF THIS PLAN SHEET.

SCCRTC
1101 PACIFIC AVE
SANTA CRUZ, CA 95060

MARK THOMAS
701 UNIVERSITY AVE, STE 200
SACRAMENTO, CA 95825

DESIGN OVERSIGHT

SIGN OFF DATE

	BY	CHECKED
DESIGN	S. RUCKER/V. SHERBY	J. YIP
DETAILS	M. BILLINGS	J. YIP
QUANTITIES	S. RUCKER	I. RODRIGUEZ

PREPARED FOR THE STATE OF CALIFORNIA DEPARTMENT OF TRANSPORTATION

M. MOORE
PROJECT ENGINEER

BRIDGE No. N/A
POST MILE N/A

VALENCIA CREEK PEDESTRIAN BRIDGE

PIER LAYOUT AND DETAILS

STRUCTURES DESIGN DETAIL SHEET (ENGLISH) (REVISION 8/16/2021)

DATE PLOTTED => 3/10/2025
FILE => 08_Valencia Creek PB_B2L.dwg
TIME PLOTTED => 12:08 PM
USERNAME => ETANAKA
ORIGINAL SCALE IN INCHES FOR REDUCED PLANS 0 1 2 3

PROJECT NUMBER & PHASE: 05200000831
COUNTY/ROUTE: SCR/1
CONTRACT No.: 05-0C734

DISREGARD PRINTS BEARING EARLIER REVISION DATES →

REVISION DATES

SHEET 8 OF 15

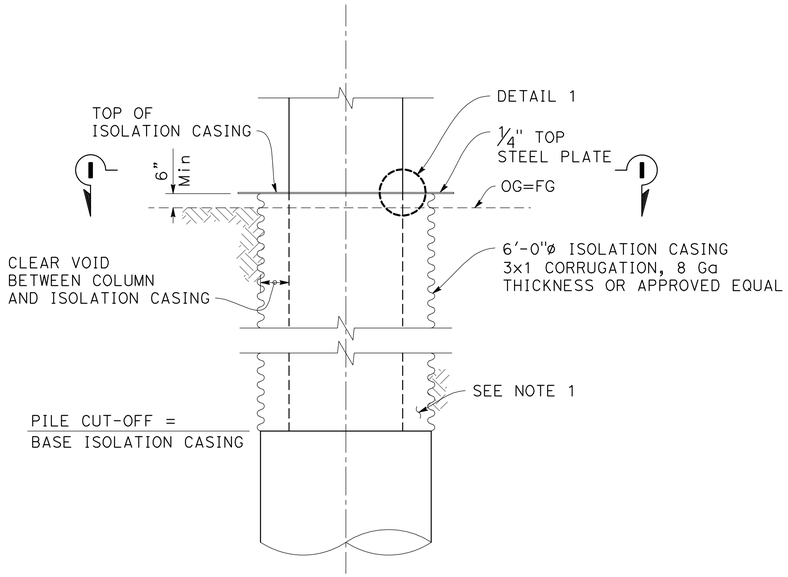

ELEVATION - ISOLATION CASING

3/8" = 1'-0"

APPROXIMATE ISOLATION CASING HEIGHT

PIER 3 12'-11"

Contractor to verify field dimensions ordering material.

NOTES:

1. Isolation casing is to be installed at Pier 3.
2. After placement of Isolation Casing, place cement slurry to fill any void region outside the casing.

Dist	COUNTY	ROUTE	POST MILES TOTAL PROJECT	SHEET No.	TOTAL SHEETS
5	SCR	1	8.1/10.7	790	931

REGISTERED CIVIL ENGINEER DATE

PLANS APPROVAL DATE

REGISTERED PROFESSIONAL ENGINEER — VICTOR ANSON SHERBY — No. 80646 — Exp. 3/31/27 — CIVIL — STATE OF CALIFORNIA

THE STATE OF CALIFORNIA OR ITS OFFICERS OR AGENTS SHALL NOT BE RESPONSIBLE FOR THE ACCURACY OR COMPLETENESS OF SCANNED COPIES OF THIS PLAN SHEET.

SCCRTC
1101 PACIFIC AVE
SANTA CRUZ, CA 95060

MARK THOMAS
701 UNIVERSITY AVE, STE 200
SACRAMENTO, CA 95825

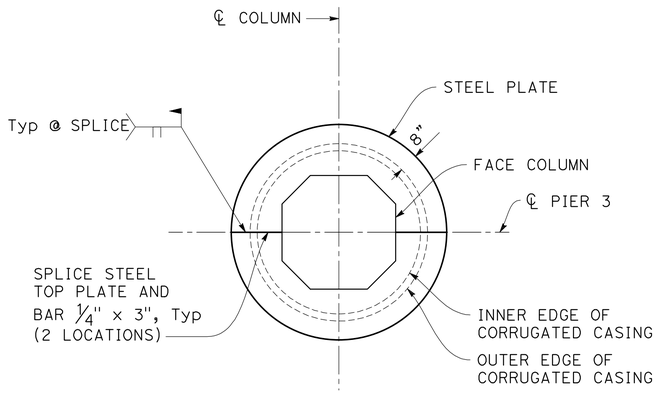

SECTION I-I

3/8" = 1'-0"

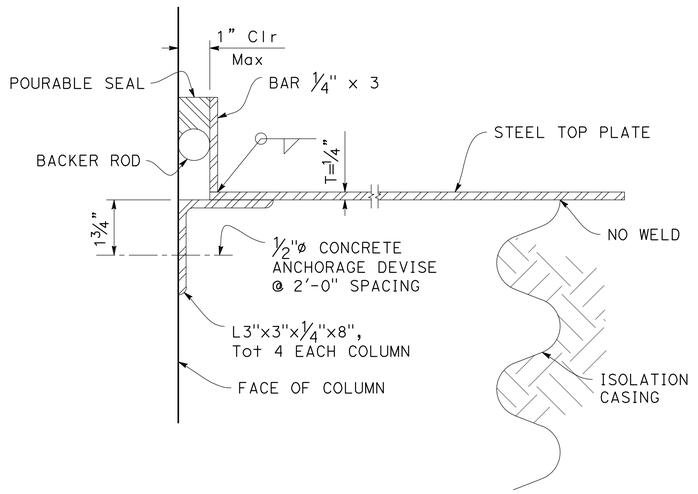

DETAIL 1

NO SCALE

DRAFT - NOT FOR CONSTRUCTION

THE CONTRACTOR SHALL VERIFY ALL CONTROLLING FIELD DIMENSIONS BEFORE ORDERING OR FABRICATING ANY MATERIAL.

DESIGN OVERSIGHT

SIGN OFF DATE

	BY	CHECKED
DESIGN	S. RUCKER/V. SHERBY	J. YIP
DETAILS	M. BILLINGS	J. YIP
QUANTITIES	S. RUCKER	I. RODRIGUEZ

PREPARED FOR THE STATE OF CALIFORNIA DEPARTMENT OF TRANSPORTATION

M. MOORE
PROJECT ENGINEER

BRIDGE No. N/A
POST MILE N/A

VALENCIA CREEK PEDESTRIAN BRIDGE

ISOLATION CASING DETAILS

STRUCTURES DESIGN DETAIL SHEET (ENGLISH) (REVISION 8/16/2021)

DATE PLOTTED => 3/10/2025 TIME PLOTTED => 12:07 PM
FILE => 09_Valencia Creek PB_ISO.dwg USERNAME => ETANAKA

ORIGINAL SCALE IN INCHES FOR REDUCED PLANS 0 1 2 3

PROJECT NUMBER & PHASE: 05200000831
COUNTY/ROUTE: SCR/1
CONTRACT No.: 05-0C734

DISREGARD PRINTS BEARING EARLIER REVISION DATES

REVISION DATES				SHEET	OF
				9	15

Dist	COUNTY	ROUTE	POST MILES TOTAL PROJECT	SHEET No.	TOTAL SHEETS
5	SCR	1	8.1/10.7	###	931

REGISTERED CIVIL ENGINEER DATE

PLANS APPROVAL DATE

REGISTERED PROFESSIONAL ENGINEER — VICTOR ANSON SHERBY — No. 80646 — Exp. 3/31/27 — CIVIL — STATE OF CALIFORNIA

THE STATE OF CALIFORNIA OR ITS OFFICERS OR AGENTS SHALL NOT BE RESPONSIBLE FOR THE ACCURACY OR COMPLETENESS OF SCANNED COPIES OF THIS PLAN SHEET.

SCCRTC
1101 PACIFIC AVE
SANTA CRUZ, CA 95060

MARK THOMAS
701 UNIVERSITY AVE, STE 200
SACRAMENTO, CA 95825

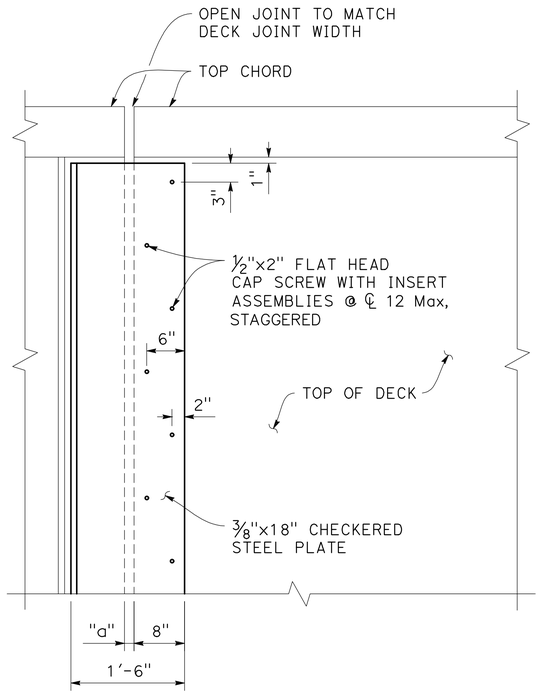

NOTE:
1. Joint Closure Plate at Abut shown, at Piers similar.
2. Recess concrete ½" for plates.
3. Plates to be hot-dipped galvanized.

PLAN - JOINT CLOSURE PLATE
NO SCALE

Bent 2 and 3 shown, Abut 4 similar

JOINT INFORMATION			"a" DIMENSIONS		
LOCATION	MOVEMENT RATING (MR)	SKEW	WINTER	SPRING / FALL	SUMMER
BENT 2	1" (SPAN 1) 1.5" (SPAN 2)	0	1.25"	1"	0.5"
BENT 3	1.5" (SPAN 2) 1" (SPAN 3)	0	1.25"	1"	0.5"
Abut 4	1" (SPAN 3)	0	1"	0.5"	0.5"

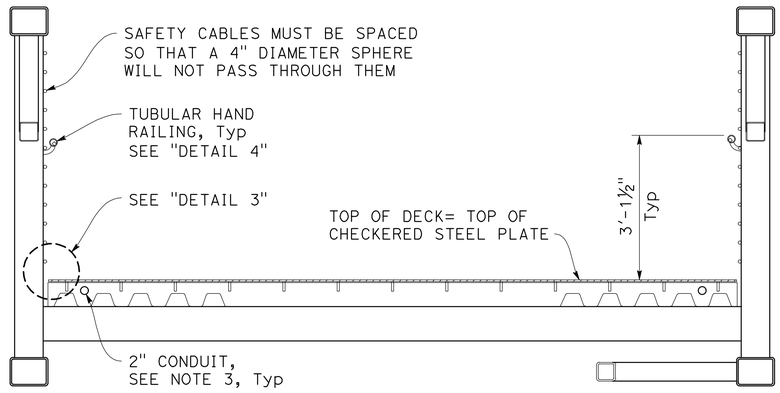

SECTION J-J
NO SCALE

NOTES:
1. For prefabricated steel truss bridge details, see truss manufacturer's approved drawings. Contractor must coordinate, supply and install anchor bolts per truss manufacturer's plans.
2. Contractor must verify all controlling field dimensions before ordering or fabricating any material.
3. See "ELECTRICAL PLANS" for details not shown.

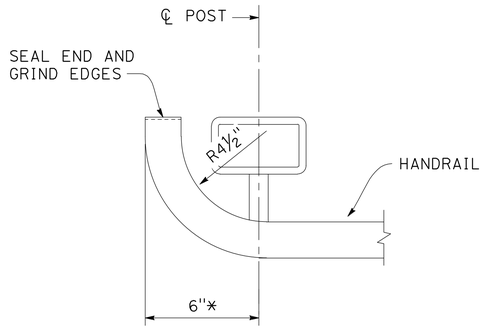

HAND RAILING END DETAIL
3" = 1'-0"

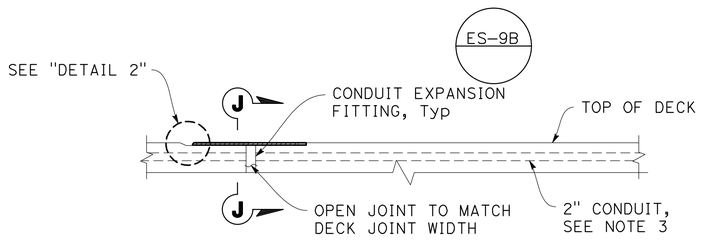

NOTE: Prefabricated Steel Truss Bridge not shown for clarity

ELEVATION
NO SCALE

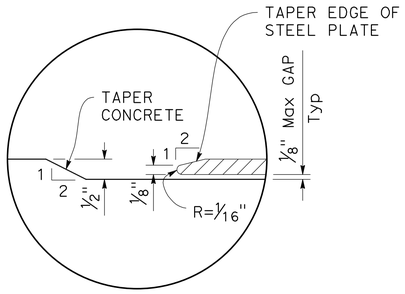

DETAIL 2
NO SCALE

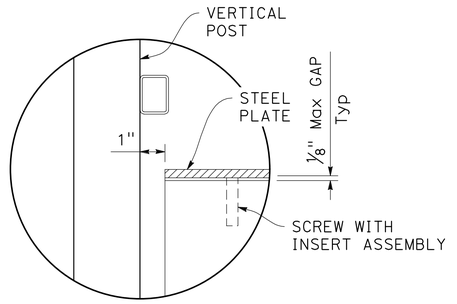

DETAIL 3
NO SCALE

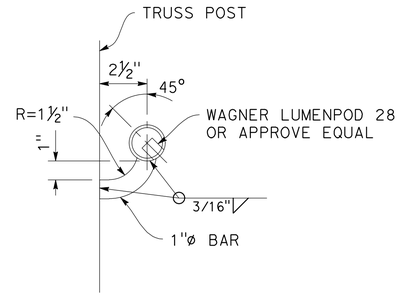

DETAIL 4
3" = 1'-0"

DRAFT - NOT FOR CONSTRUCTION

THE CONTRACTOR SHALL VERIFY ALL CONTROLLING FIELD DIMENSIONS BEFORE ORDERING OR FABRICATING ANY MATERIAL.

DESIGN OVERSIGHT	DESIGN	BY S. RUCKER/V. SHERBY	CHECKED J. YIP	PREPARED FOR THE STATE OF CALIFORNIA DEPARTMENT OF TRANSPORTATION	M. MOORE, PROJECT ENGINEER
SIGN OFF DATE	DETAILS	BY M. BILLINGS	CHECKED J. YIP		BRIDGE No. N/A; POST MILE N/A
	QUANTITIES	BY S. RUCKER	CHECKED I. RODRIGUEZ		VALENCIA CREEK PEDESTRIAN BRIDGE JOINT CLOSURE PLATE DETAILS

STRUCTURES DESIGN DETAIL SHEET (ENGLISH) (REVISION 8/16/2021)

DATE PLOTTED => 3/10/2025 TIME PLOTTED => 12:09 PM
FILE => 10_Valencia Creek PB_JCP.dwg USERNAME => ETANAKA
ORIGINAL SCALE IN INCHES FOR REDUCED PLANS 0 1 2 3

PROJECT NUMBER & PHASE: 05200000831 COUNTY/ROUTE: SCR/1 CONTRACT No.: 05-0C734

DISREGARD PRINTS BEARING EARLIER REVISION DATES →

REVISION DATES | SHEET 10 | OF 15

Dist	COUNTY	ROUTE	POST MILES TOTAL PROJECT	SHEET No.	TOTAL SHEETS
5	SCR	1	8.1/10.7	###	931

REGISTERED CIVIL ENGINEER DATE

PLANS APPROVAL DATE

REGISTERED PROFESSIONAL ENGINEER
VICTOR ANSON SHERBY
No. 80646
Exp. 3/31/25
CIVIL
STATE OF CALIFORNIA

THE STATE OF CALIFORNIA OR ITS OFFICERS OR AGENTS SHALL NOT BE RESPONSIBLE FOR THE ACCURACY OR COMPLETENESS OF SCANNED COPIES OF THIS PLAN SHEET.

SCCRTC
1101 PACIFIC AVE
SANTA CRUZ, CA 95060

MARK THOMAS
701 UNIVERSITY AVE, STE 200
SACRAMENTO, CA 95825

NOTES:

(A) 2" Min Expanded Polystyrene

(B) 1" Expanded Polystyrene

(C) Longitudinal Construction Joint

1. No expansion joints in pedestrian slab within wall limits.

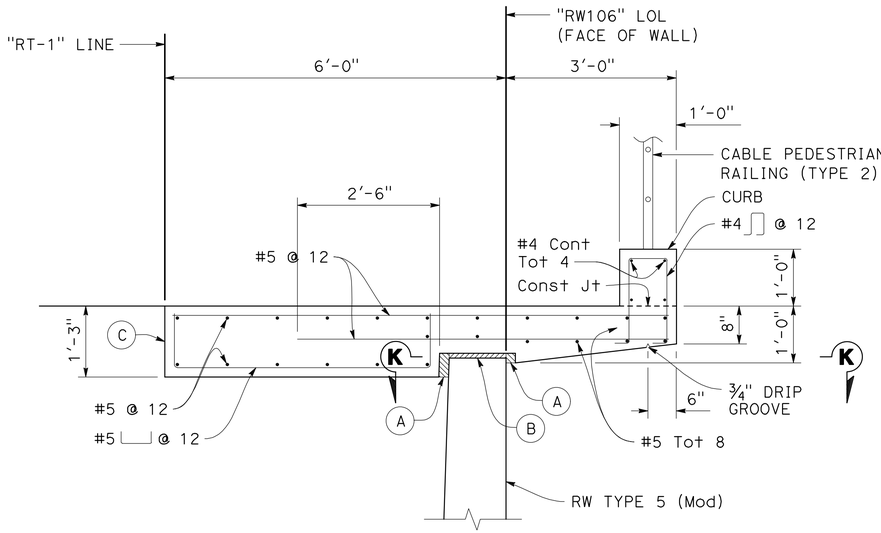

PEDESTRIAN SLAB DETAIL
3/4" = 1'-0"

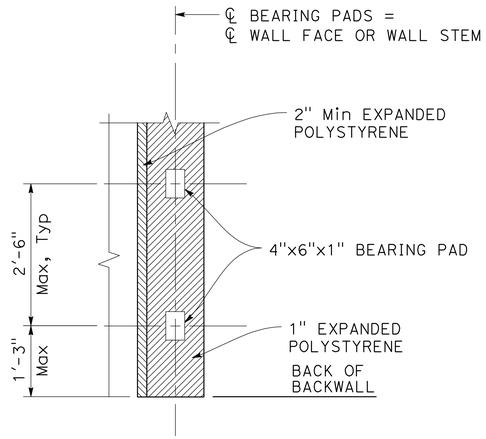

SECTION K-K
3/4" = 1'-0"

DRAFT - NOT FOR CONSTRUCTION

THE CONTRACTOR SHALL VERIFY ALL CONTROLLING FIELD DIMENSIONS BEFORE ORDERING OR FABRICATING ANY MATERIAL.

DESIGN OVERSIGHT

SIGN OFF DATE

	BY	CHECKED
DESIGN	M. MOORE	T. PHAM
DETAILS	J. VALENZUELA	T. PHAM
QUANTITIES	S. RUCKER	I. RODRIGUEZ

PREPARED FOR THE
STATE OF CALIFORNIA
DEPARTMENT OF TRANSPORTATION

M. MOORE
PROJECT ENGINEER

BRIDGE No. N/A
POST MILE N/A

VALENCIA CREEK PEDESTRIAN BRIDGE
PEDESTRIAN SLAB DETAILS

STRUCTURES DESIGN DETAIL SHEET (ENGLISH) (REVISION 8/16/2021)

DATE PLOTTED => 3/10/2025 TIME PLOTTED => 12:38 PM
FILE => 11_Valencia Creek PB_PSD.dwg USERNAME => ETANAKA

ORIGINAL SCALE IN INCHES FOR REDUCED PLANS 0 1 2 3

PROJECT NUMBER & PHASE: 05200000831
COUNTY/ROUTE: SCR/1
CONTRACT No.: 05-0C734

DISREGARD PRINTS BEARING EARLIER REVISION DATES →

REVISION DATES				SHEET	OF
				11	15

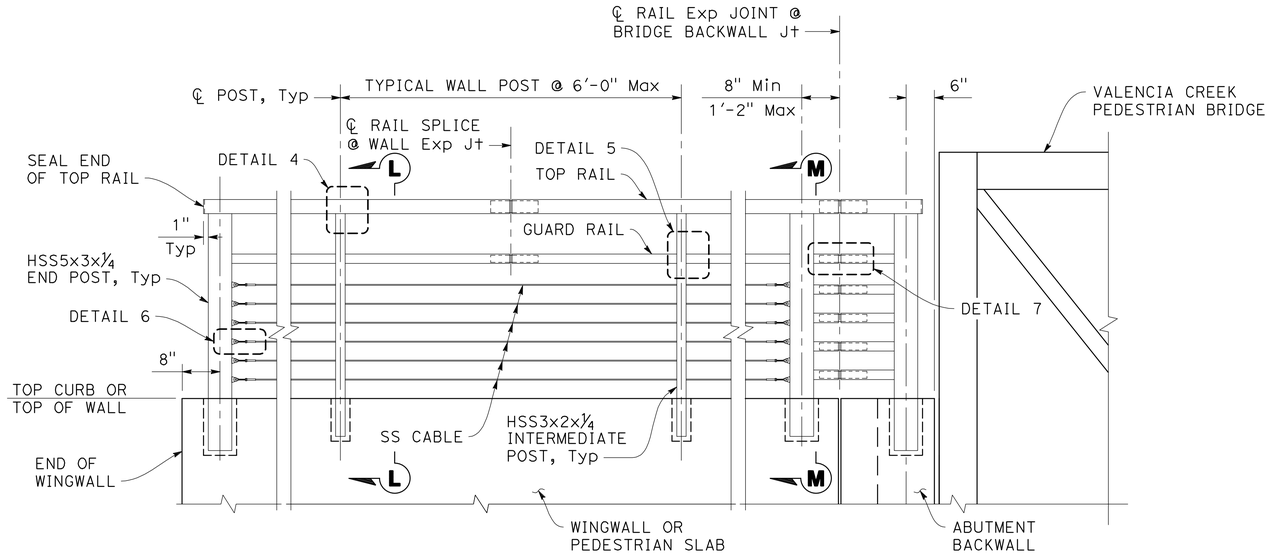

TYPICAL ELEVATION

3/4" = 1'-0"

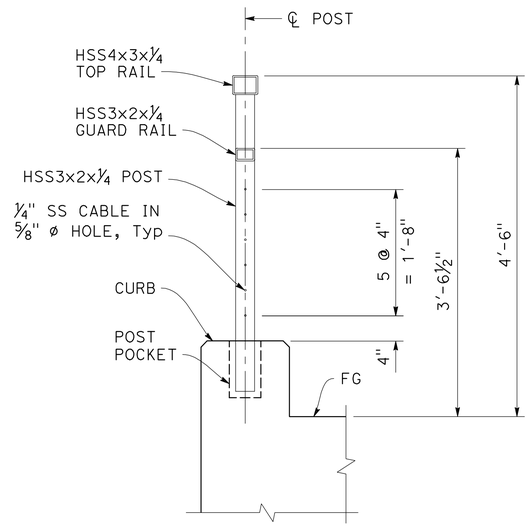

SECTION L-L

1" = 1'-0"

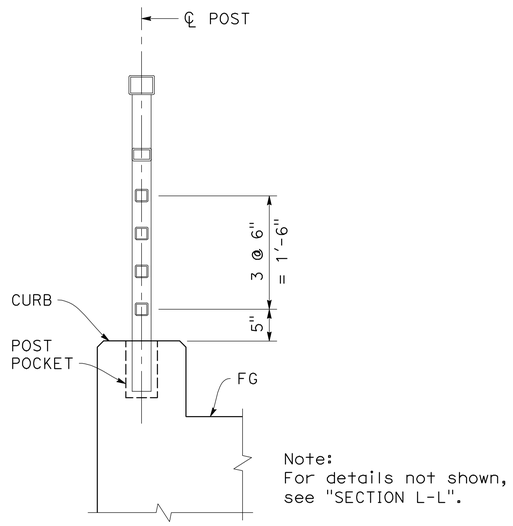

SECTION M-M

1" = 1'-0"

Dist	COUNTY	ROUTE	POST MILES TOTAL PROJECT	SHEET No.	TOTAL SHEETS
5	SCR	1	8.1/10.7	793	931

REGISTERED CIVIL ENGINEER DATE

PLANS APPROVAL DATE

REGISTERED PROFESSIONAL ENGINEER — VICTOR ANSON SHERBY — No. 80646 — Exp. 3/31/25 — CIVIL — STATE OF CALIFORNIA

THE STATE OF CALIFORNIA OR ITS OFFICERS OR AGENTS SHALL NOT BE RESPONSIBLE FOR THE ACCURACY OR COMPLETENESS OF SCANNED COPIES OF THIS PLAN SHEET.

SCCRTC
1101 PACIFIC AVE
SANTA CRUZ, CA 95060

MARK THOMAS
701 UNIVERSITY AVE, STE 200
SACRAMENTO, CA 95825

NOTES:

1. All components of the cable pedestrian railings must be hot dipped galvanized and finished with Natina stain.
2. All HSS members to comply with ASTM A500/A500m, Grade B. All other steel to comply with ASTM A36/A36M.
3. Orient tube seams to be on outside face of railing (i.e. not facing trail).
4. For cable pedestrian railing details and turnbuckle details, see "CABLE PEDESTRIAN RAILING (TYPE 2) DETAILS No. 2" sheet.

DRAFT - NOT FOR CONSTRUCTION

THE CONTRACTOR SHALL VERIFY ALL CONTROLLING FIELD DIMENSIONS BEFORE ORDERING OR FABRICATING ANY MATERIAL.

DESIGN OVERSIGHT

SIGN OFF DATE

	BY	CHECKED
DESIGN	M. MOORE	M. KLEYMANN
DETAILS	J. VALENZUELA	M. MOORE
QUANTITIES	S. RUCKER	I. RODRIGUEZ

PREPARED FOR THE STATE OF CALIFORNIA DEPARTMENT OF TRANSPORTATION

M. MOORE
PROJECT ENGINEER

BRIDGE No. N/A
POST MILE N/A

VALENCIA CREEK PEDESTRIAN BRIDGE

CABLE PEDESTRIAN RAILING (TYPE 2) DETAILS No. 1

STRUCTURES DESIGN DETAIL SHEET (ENGLISH) (REVISION 8/16/2021)

DATE PLOTTED => 3/10/2025 TIME PLOTTED => 12:13 PM
FILE => 12_Valencia Creek PB_CPR1.dwg USERNAME => JVALENZUELA

ORIGINAL SCALE IN INCHES FOR REDUCED PLANS 0 1 2 3

PROJECT NUMBER & PHASE: 05200000831
COUNTY/ROUTE: SCR/1
CONTRACT No.: 05-0C734

DISREGARD PRINTS BEARING EARLIER REVISION DATES

REVISION DATES				SHEET	OF
				12	15

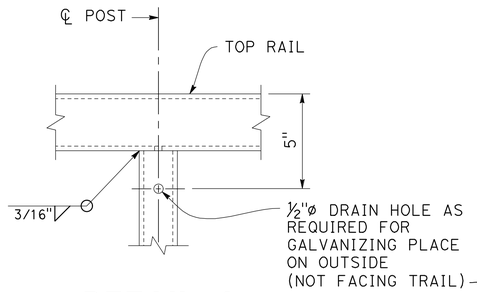

DETAIL 4
3" = 1'-0"

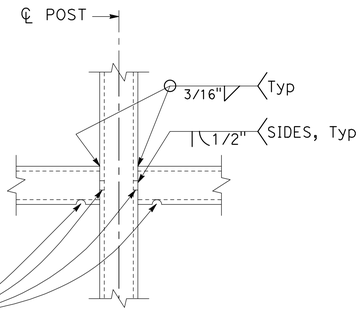

DETAIL 5
3" = 1'-0"

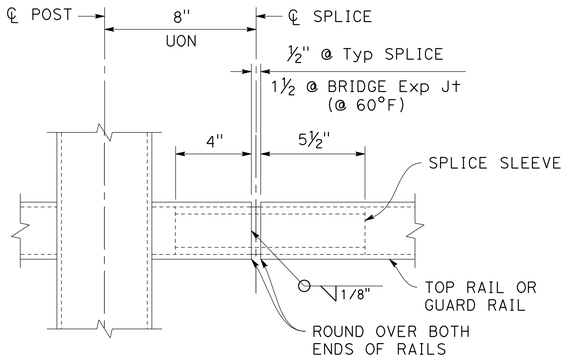

DETAIL 7
3" = 1'-0"

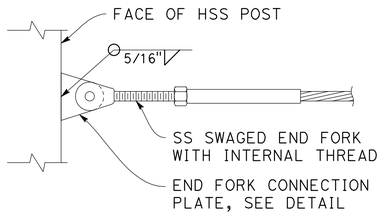

DETAIL 6
NO SCALE

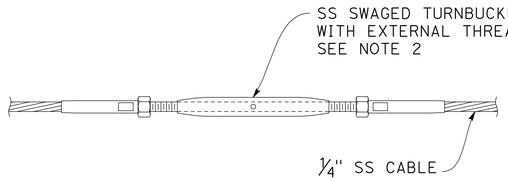

TYPICAL TURNBUCKLE DETAIL
NO SCALE

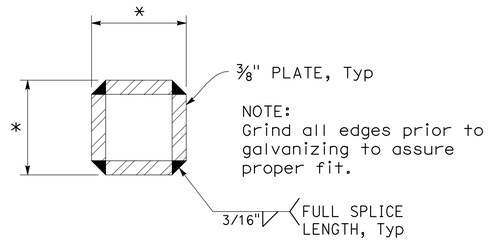

* The difference between the out-to-out rail splice sleeve dimensions and the clear inside dimensions of the tubular steel rail elements must not exceed 3/16" after galvanizing

SPLICE SLEEVE
NO SCALE

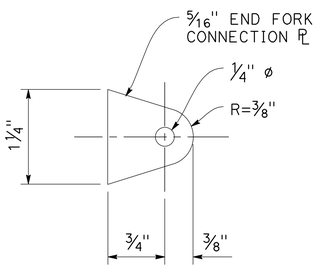

END FORK CONNECTION PLATE DETAIL
NO SCALE

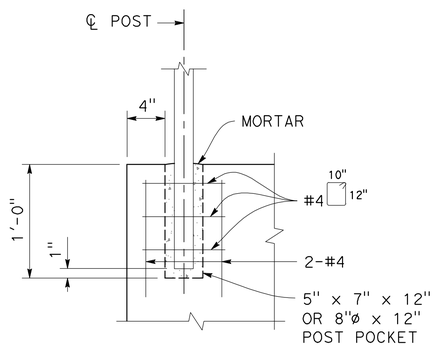

END POST POCKET DETAIL
NO SCALE

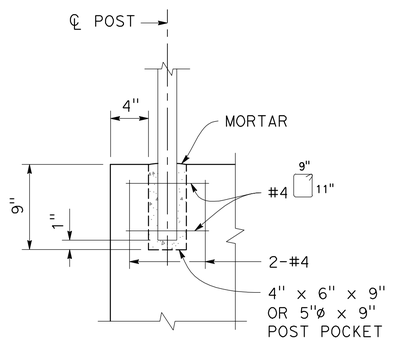

INTERMEDIATE POST POCKET DETAIL
NO SCALE

Dist	COUNTY	ROUTE	POST MILES TOTAL PROJECT	SHEET No.	TOTAL SHEETS
5	SCR	1	8.1/10.7	###	931

REGISTERED CIVIL ENGINEER DATE

PLANS APPROVAL DATE

REGISTERED PROFESSIONAL ENGINEER — VICTOR ANSON SHERBY — No. 80646 — Exp. 3/31/25 — CIVIL — STATE OF CALIFORNIA

THE STATE OF CALIFORNIA OR ITS OFFICERS OR AGENTS SHALL NOT BE RESPONSIBLE FOR THE ACCURACY OR COMPLETENESS OF SCANNED COPIES OF THIS PLAN SHEET.

SCCRTC
1101 PACIFIC AVE
SANTA CRUZ, CA 95060

MARK THOMAS
701 UNIVERSITY AVE, STE 200
SACRAMENTO, CA 95825

NOTES:

1. For typical pedestrian bridge railing notes and for location of details, see "CABLE PEDESTRIAN RAILING (TYPE 2) DETAILS No. 1" sheet.
2. Cables must be spliced with turnbuckles spaced no more than 200 ft and not less than 50ft. turnbuckle must have minimum 1½" of adjustment and a minimum breaking load of 3500 lbs.
3. Submit cable product and fittings to engineer for review and approval. End fork connection plate dimensions to be adjusted to suit selected end fork product. Provide final dimensions when submitting fitting details.

DRAFT - NOT FOR CONSTRUCTION

THE CONTRACTOR SHALL VERIFY ALL CONTROLLING FIELD DIMENSIONS BEFORE ORDERING OR FABRICATING ANY MATERIAL.

DESIGN OVERSIGHT

SIGN OFF DATE

	BY	CHECKED
DESIGN	M. MOORE	M. KLEYMANN
DETAILS	J. VALENZUELA	M. MOORE
QUANTITIES	S. RUCKER	I. RODRIGUEZ

PREPARED FOR THE STATE OF CALIFORNIA DEPARTMENT OF TRANSPORTATION

M. MOORE
PROJECT ENGINEER

BRIDGE No. N/A
POST MILE N/A

VALENCIA CREEK PEDESTRIAN BRIDGE

CABLE PEDESTRIAN RAILING (TYPE 2) DETAILS No. 2

STRUCTURES DESIGN DETAIL SHEET (ENGLISH) (REVISION 8/16/2021)

DATE PLOTTED => 3/10/2025 TIME PLOTTED => 12:14 PM
FILE => 13_Valencia Creek PB_CPR2.dwg USERNAME => JVALENZUELA

ORIGINAL SCALE IN INCHES FOR REDUCED PLANS 0 1 2 3

PROJECT NUMBER & PHASE: 05200000831
COUNTY/ROUTE: SCR/1
CONTRACT No.: 05-0C734

DISREGARD PRINTS BEARING EARLIER REVISION DATES

REVISION DATES				SHEET	OF
				13	15

Dist	COUNTY	ROUTE	POST MILES TOTAL PROJECT	SHEET No.	TOTAL SHEETS
5	SCR	1	8.1/10.7	797	931

REGISTERED CIVIL ENGINEER DATE

PLANS APPROVAL DATE

REGISTERED PROFESSIONAL ENGINEER — MATTHEW KLEYMANN — No. 91100 — Exp. 3/31/26 — CIVIL — STATE OF CALIFORNIA

THE STATE OF CALIFORNIA OR ITS OFFICERS OR AGENTS SHALL NOT BE RESPONSIBLE FOR THE ACCURACY OR COMPLETENESS OF SCANNED COPIES OF THIS PLAN SHEET.

SCCRTC
1523 PACIFIC AVE
SANTA CRUZ, CA 95060

MARK THOMAS
701 UNIVERSITY AVE, STE 200
SACRAMENTO, CA 95825

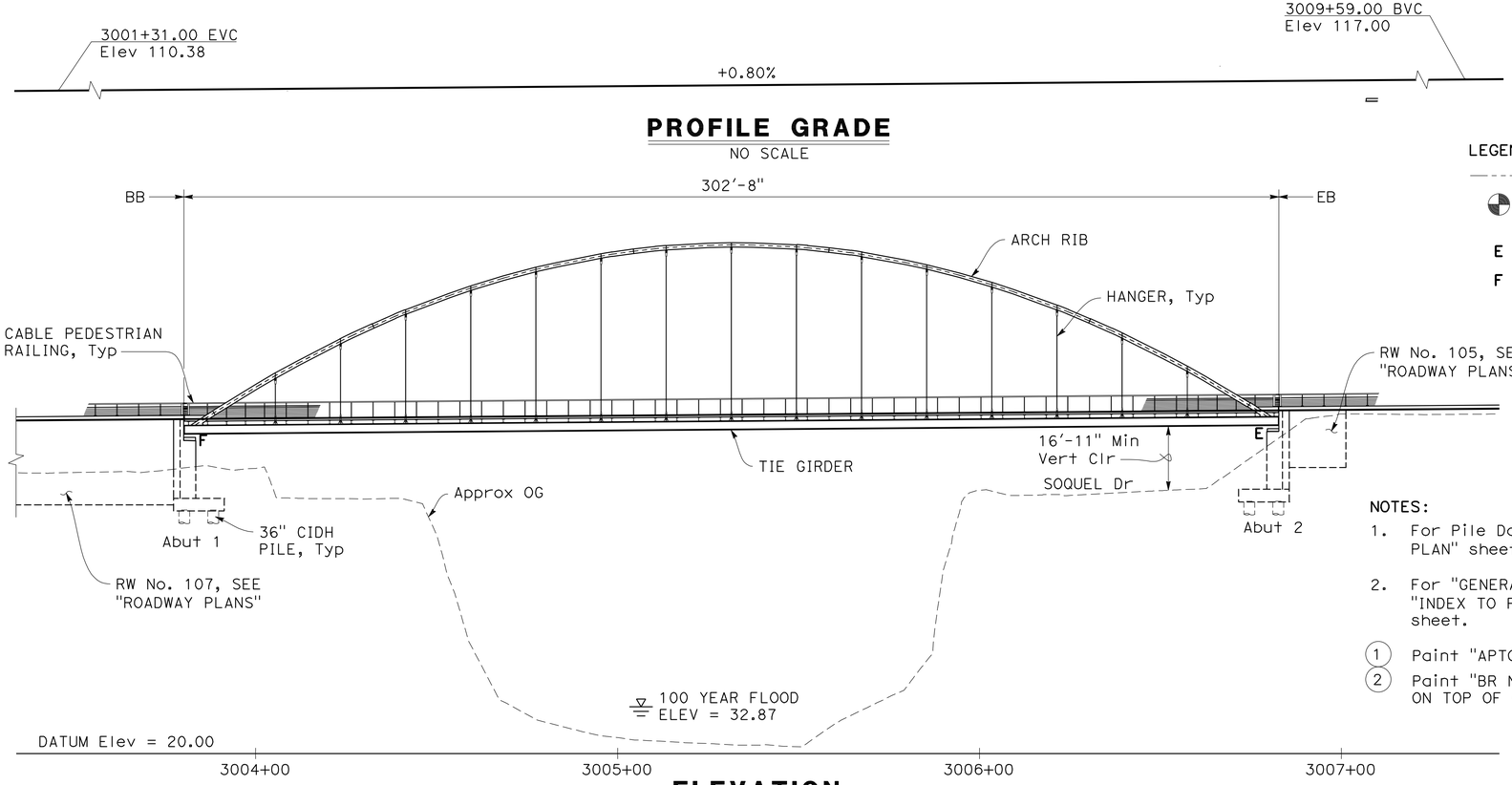

LEGEND:

- Existing Bridge
- Point of Minimum Vertical Clearance
- **E** Expansion Bearing
- **F** Fixed Bearing

NOTES:

1. For Pile Data Table, see "FOUNDATION PLAN" sheet.
2. For "GENERAL NOTES, "QUANTITIES, and "INDEX TO PLANS", see "GENERAL NOTES" sheet.

(1) Paint "APTOS CREEK PEDESTRIAN BRIDGE"
(2) Paint "BR NO. 36C-XXXX" & Year Constructed ON TOP OF CURTAIN WALL

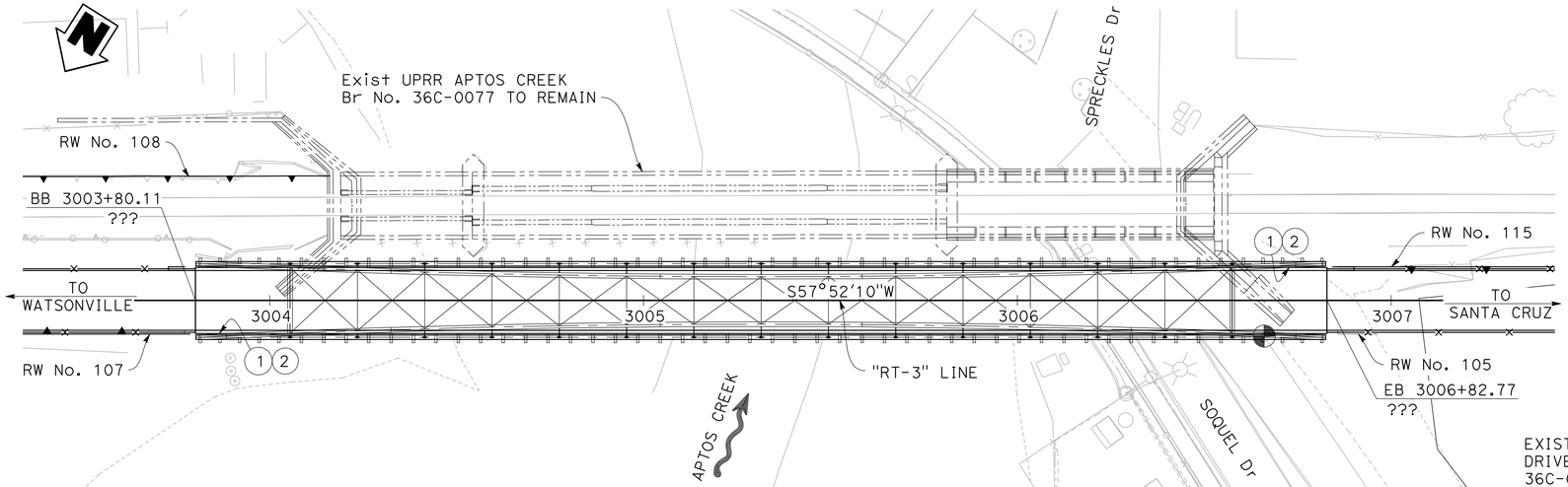

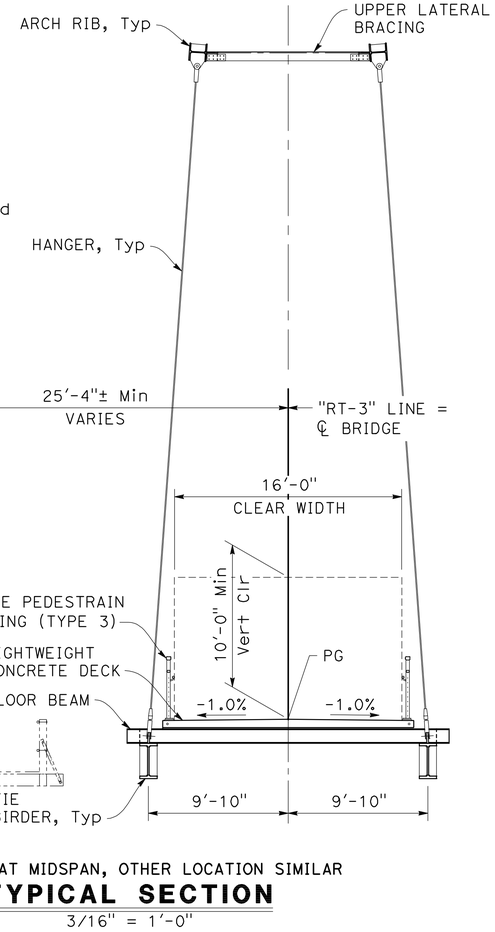

SECTION AT MIDSPAN, OTHER LOCATION SIMILAR

TYPICAL SECTION
3/16" = 1'-0"

DRAFT NOT FOR CONSTRUCTION

DESIGN OVERSIGHT	DESIGN	BY M. KLEYMANN	CHECKED X	SEISMIC ANALYSIS	BY X	CHECKED X	PREPARED FOR THE STATE OF CALIFORNIA DEPARTMENT OF TRANSPORTATION
SIGN OFF DATE	DETAILS	BY J. VALENZUELA	CHECKED X	LAYOUT	BY M. KLEYMANN	CHECKED X	
	QUANTITIES	BY X	CHECKED X	SPECIFICATIONS	BY X	PLANS AND SPECS COMPARED X	

M. KLEYMANN
PROJECT ENGINEER

BRIDGE No.	APTOS CREEK PEDESTRIAN BRIDGE
36-XXXX	
POST MILE	GENERAL PLAN
X	

STRUCTURES DESIGN GENERAL PLAN SHEET (ENGLISH) (REVISION 2/8/2022)

DATE PLOTTED => 4/1/2025 TIME PLOTTED => 12:00 PM
FILE => 01_Aptos Creek PB_GP.dwg USERNAME => JVALENZUELA

ORIGINAL SCALE IN INCHES FOR REDUCED PLANS 0 1 2 3

PROJECT NUMBER & PHASE:0518000116 COUNTY/ROUTE: SCR/1 CONTRACT No.: 05-0C734

DISREGARD PRINTS BEARING EARLIER REVISION DATES

REVISION DATES				SHEET	OF
				1	39

GENERAL NOTES
LOAD AND RESISTANCE FACTOR DESIGN

Dist	COUNTY	ROUTE	POST MILES TOTAL PROJECT	SHEET No.	TOTAL SHEETS
5	SCR	1	8.1/10.7	798	931

REGISTERED CIVIL ENGINEER DATE

PLANS APPROVAL DATE

REGISTERED PROFESSIONAL ENGINEER — MATTHEW KLEYMANN — No. 91100 — Exp. 3/31/26 — CIVIL — STATE OF CALIFORNIA

THE STATE OF CALIFORNIA OR ITS OFFICERS OR AGENTS SHALL NOT BE RESPONSIBLE FOR THE ACCURACY OR COMPLETENESS OF SCANNED COPIES OF THIS PLAN SHEET.

SCCRTC
1523 PACIFIC AVE
SANTA CRUZ, CA 95060

MARK THOMAS
701 UNIVERSITY AVE, STE 200
SACRAMENTO, CA 95825

DESIGN:
AASTHO LRFD Bridge Design Specifications, 8th edition with California Amendments, preface dated April 2019.

Steel Arch Rib is also designed for AASTHO LRFD Bridge Design Specifications, 9th edition.

AASTHO LRFD Guide Specifications for Design of Pedestrian Bridges, 2nd Edition, December 2009.

Caltrans Standard Plans and Specifications, 2024 Edition

Bridge Fatigue per AASTHO LRFD Specifications for Structural Supports for Highway Signs, Luminaires and Traffic Signals, 1st Edition with 2017, 2018, 2019 and 2020 Interim Revision.

Structural Technical Policies as of March, 2023.

SEISMIC DESIGN:
Caltrans Seismic Design Criteria (SDC), Version 2.0 dated April 2019

GEOMETRY:
All work points and stations based on grid coordinate system.

Unless otherwise noted, all dimensions are measured horizontally or vertically in the global X, Y, Z Coordinate system defined on the "ARCH GEOMETRY AND LAYOUT" sheet.

Unless otherwise noted, all dimensions details and workpoints are shown at the Reference State condition defined as deformed geometry under permanent loads at 60°F at Day 10,000.

DEAD LOAD:
Bridge design does not include an allowance for future wearing surface. Bridge design does not include an allowance for future utilities.
Lightweight Reinforced Concrete Deck = 120 pcf
Structural steel = 490 pcf

The bridge design includes a load allowance of XX psf for the stay in place metal forms and EPS in the troughs.

LIVE LOADING:
H10 maintenance truck or 90 psf pedestrian load

SEISMIC LOADING:
Soil Profile : Vs30 = 271 m/s (890 ft/s)
Moment Magnitude : 7.07
Peak Ground Acceleration : 0.71g
See "ARS CURVE"

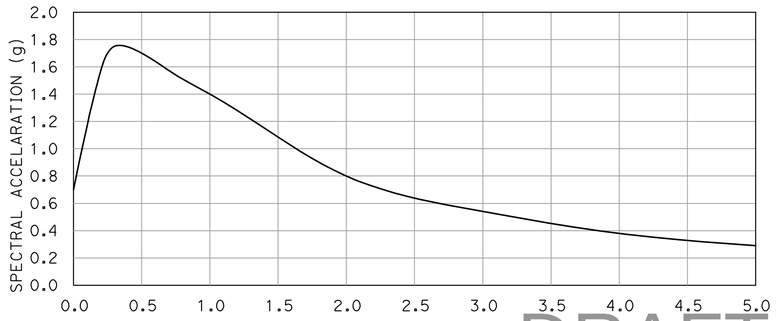

ARS CURVE
5% DAMPING

TEMPERATURE:
Temperature range is 0°F to 120°F. Force effects for structural analysis are based on a reference and effective construction temperature of 60°F.

The temperature gradient per AASTHO 3.12.3 is applied to the superstructure tie girder and concrete deck.

Concurrently with the positive temperature gradient in the superstructure gradient is applied to the arch rib of 30°F.

CONCRETE:
f'c = 3.6 ksi unless otherwise noted
fy = 60 ksi
n = 8

STRUCTURAL STEEL:
Rolled steel shapes must conform to ASTM A992 Grade 50. Plates and bars must conform to ASTM A709 Grade 50, UON. Fabrication and testing of the structural steel is to be based on the following designations.

Fracture Critical Members:
- Arch ribs including splice plates and hanger anchorage plates
- All components of the arch knuckle
- Upper diagonal bracing, tee bracing, and end brace including gusset and connection plates
- Tie girders including splice plates and hanger anchorage plates
- Type 3 floor beams

All components/areas of the above members are subject to tension.

Primary Tension Members:
- Type 1 and Type 2 floor beam bottom flange and web
- Stiffeners on arch ribs, tie girders or floorbeams not identified above
- Bearing plates

Secondary Members:
- Bridge railings
- Expansion joint cover plates

Unless otherwise noted, all structural steel components shall be hot dipped galvanized. All exterior/visible surfaces except hangers and architectural fork sockets must be finished with Natina stain.

FASTENERS AND CONNECTIONS
All fasteners must be 7/8"ø ASTM F3125 Grade 325, Type 1.

All bolts, nuts, and washers must be hot-dipped galvanized. Bolts, nuts and washers must be finished with Natina stain after connections are completed.

Fasteners must be placed in standard sized holes and have the threads excluded from the shear plane.

Faying surfaces shall be galvanized and are designed for Class A surface condition (μ = 0.3) as defined in the Research Council Structure Connections (RCSC) Specification for Structural Joints using high-strength bolts (Class C per AASHTO LRFD BDS). Faying surfaces shall not receive Natina stain.

In horizontal orientation connections, all fasteners must be installed with the heads up unless otherwise noted.

Shear connectors must conform to ASTM A108, with a minimum tensile strength of 60 ksi.

INDEX TO PLANS

SHEET No.	TITLE	SHEET No.	TITLE
1	GENERAL PLAN	21	TIE GIRDER DETAILS No. 1
2	INDEX TO PLANS	22	TIE GIRDER DETAILS No. 2
3	DECK CONTOURS	23	FLOORBEAM TYPE 1 & 2 DETAILS
4	FOUNDATION PLAN	24	FLOORBEAM TYPE 3 DETAILS No. 1
5	ABUTMENT 1 LAYOUT	25	FLOORBEAM TYPE 3 DETAILS No. 2
6	ABUTMENT 2 LAYOUT	26	BEARING LAYOUT
7	ABUTMENT DETAILS No. 1	27	BEARING DETAILS
8	ABUTMENT DETAILS No. 2	28	HANGER GEOMETRY AND DETAILS
9	ABUTMENT DETAILS No. 3	29	HANGER DATA
10	ARCH RIB GEOMETRY AND LAYOUT No. 1	30	CONCRETE TYPICAL SECTION
11	ARCH RIB GEOMETRY AND LAYOUT No. 2	31	CONCRETE DECK REINFORCEMENT
12	ARCH PLAN AND ELEVATION	32	EXPANSION JOINT DETAIL
13	ARCH RIB DETAILS No. 1	33	METAL BRIDGE RAILING DETAILS No. 1
14	ARCH RIB DETAILS No. 2	34	METAL BRIDGE RAILING DETAILS No. 2
15	ARCH RIB DETAILS No. 3	35	METAL BRIDGE RAILING DETAILS No. 3
16	ARCH RIB DETAILS No. 4	36	SUGGESTED ERECTION SEQUENCE 1
17	ARCH RIB DETAILS No. 5	37	SUGGESTED ERECTION SEQUENCE 2
18	UPPER BRACING DETAILS No. 1	38	LOG OF TEST BORING SHEET 1 OF 3
19	UPPER BRACING DETAILS No. 2	39	LOG OF TEST BORING SHEET 2 OF 3
20	DECK FRAMING PLAN	40	LOG OF TEST BORING SHEET 3 OF 3

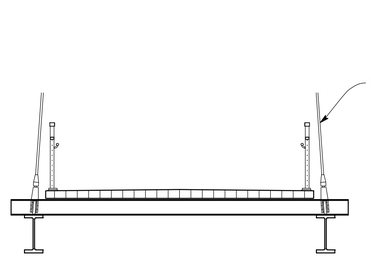

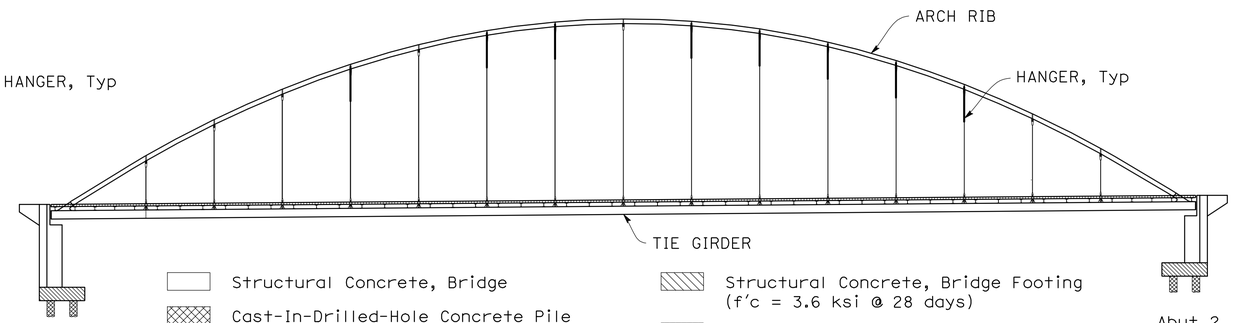

CONCRETE STRENGTH AND TYPE LIMITS
NO SCALE

DRAFT - NOT FOR CONSTRUCTION

DESIGN OVERSIGHT

SIGN OFF DATE

	BY	CHECKED
DESIGN	M. KLEYMANN	X
DETAILS	J. VALENZUELA	X
QUANTITIES	X	X

PREPARED FOR THE STATE OF CALIFORNIA DEPARTMENT OF TRANSPORTATION

M. KLEYMANN
PROJECT ENGINEER

BRIDGE No. 36-XXXX
POST MILE X

APTOS CREEK PEDESTRIAN BRIDGE
INDEX TO PLANS

STRUCTURES DESIGN DETAIL SHEET (ENGLISH) (REVISION 8/16/2021)

DATE PLOTTED => 4/1/2025 TIME PLOTTED => 12:00 PM
FILE => 02_Aptos Creek PB_ITP.dwg USERNAME => JVALENZUELA

ORIGINAL SCALE IN INCHES FOR REDUCED PLANS 0 1 2 3

PROJECT NUMBER & PHASE:0518000116
COUNTY/ROUTE: SCR/1
CONTRACT No.: 05-0C734

DISREGARD PRINTS BEARING EARLIER REVISION DATES →

REVISION DATES				SHEET	OF
				2	39

Dist	COUNTY	ROUTE	POST MILES TOTAL PROJECT	SHEET No.	TOTAL SHEETS
5	SCR	1	8.1/10.7	799	931

REGISTERED CIVIL ENGINEER DATE

PLANS APPROVAL DATE

REGISTERED PROFESSIONAL ENGINEER
MATTHEW KLEYMANN
No. 91100
Exp. 3/31/26
CIVIL
STATE OF CALIFORNIA

THE STATE OF CALIFORNIA OR ITS OFFICERS OR AGENTS SHALL NOT BE RESPONSIBLE FOR THE ACCURACY OR COMPLETENESS OF SCANNED COPIES OF THIS PLAN SHEET.

SCCRTC
1523 PACIFIC AVE
SANTA CRUZ, CA 95060

MARK THOMAS
701 UNIVERSITY AVE, STE 200
SACRAMENTO, CA 95825

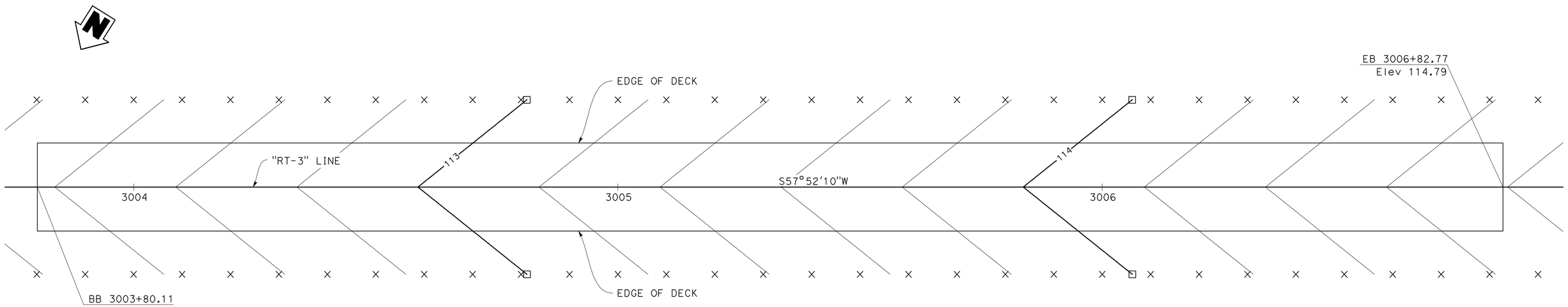

DECK CONTOURS

1" = 10'

NOTES:

1. Contour interval is 0.2 feet.
2. Contours do not include camber.
3. × – Indicates 10 feet intervals along station line
4. □ – Indicates 1 foot contour interval

DRAFT - NOT FOR CONSTRUCTION

DESIGN OVERSIGHT

SIGN OFF DATE

	BY	CHECKED
DESIGN	M. KLEYMANN	X
DETAILS	J. VALENZUELA	X
QUANTITIES	X	X

PREPARED FOR THE
STATE OF CALIFORNIA
DEPARTMENT OF TRANSPORTATION

M. KLEYMANN
PROJECT ENGINEER

BRIDGE No. 36-XXXX
POST MILE X

APTOS CREEK PEDESTRIAN BRIDGE

DECK CONTOURS

STRUCTURES DESIGN DETAIL SHEET (ENGLISH) (REVISION 8/16/2021)

DATE PLOTTED => 4/1/2025 TIME PLOTTED => 12:01 PM
FILE => 03_Aptos Creek PB_DC.dwg USERNAME => JVALENZUELA

ORIGINAL SCALE IN INCHES FOR REDUCED PLANS 0 1 2 3

PROJECT NUMBER & PHASE:0518000116 COUNTY/ROUTE:SCR/1 CONTRACT No.:05-0C734

DISREGARD PRINTS BEARING EARLIER REVISION DATES

REVISION DATES					SHEET	OF
					3	39

PILE DATA TABLE

LOCATION	PILE TYPE	NOMINAL RESISTANCE (kips)		CUT-OFF ELEVATIONS (ft)	DESIGN TIP ELEVATIONS (ft)	SPECIFIED TIP ELEVATIONS (ft)
		COMPRESSION	TENSION			
Abut 1	36" CIDH	-	-	-	-	-
Abut 2	36" CIDH	-	-	-	-	-

NOTES:
1. Design tip elevations are controlled by (a) Compression, (b) Tension, (d) Lateral Load
2. Settlements under service loads do not govern the design.

SCOUR DATA

SUPPORT LOCATION	LONG TERM (DEGRADATION AND CONTRACTION) SCOUR ELEVATION (ft)	SHORT TERM (LOCAL) SCOUR DEPTH (ft)
Abut 1	N/A	N/A
Abut 2	N/A	N/A

SCOUR DATA

BENCHMARK AND DATUM

MONUMENT	COORDINATES		ELEVATION	DESCRIPTION/LOCATION
	NORTH	EAST		
7	1816417.66	6152304.93	53.8	MAG NAIL & SHRINER "SR1" Sta 277+48.31 9.43' Lt

HYDROLOGIC SUMMARY

FOR BRIDGE No. Aptos Creek Pedestrian Bridge

DRAINAGE AREA: 12.20 Square Miles

FREQUENCY	DESIGN FLOOD	BASE FLOOD	FLOOD OF RECORD
	50-YEAR	100-YEAR	N/A
DISCHARGE (Cubic Feet per Second)	N/A	3,140 cfs	N/A
WATER SURFACE Elev AT BRIDGE (Feet)	N/A	32.87 ft	N/A

Flood Plain Data is based upon information available when the plans were prepared and is shown to meet Federal Requirements. The accuracy of said information is not warranted by Caltrans and interested or affected parties should make their own investigation.

Dist	COUNTY	ROUTE	POST MILES TOTAL PROJECT	SHEET No.	TOTAL SHEETS
5	SCR	1	8.1/10.7	800	931

REGISTERED CIVIL ENGINEER DATE

PLANS APPROVAL DATE

REGISTERED PROFESSIONAL ENGINEER — MATTHEW KLEYMANN — No. 91100 — Exp. 3/31/26 — CIVIL — STATE OF CALIFORNIA

THE STATE OF CALIFORNIA OR ITS OFFICERS OR AGENTS SHALL NOT BE RESPONSIBLE FOR THE ACCURACY OR COMPLETENESS OF SCANNED COPIES OF THIS PLAN SHEET.

SCCRTC
1523 PACIFIC AVE
SANTA CRUZ, CA 95060

MARK THOMAS
701 UNIVERSITY AVE, STE 200
SACRAMENTO, CA 95825

NOTES:
1. For Retaining Wall details, see "ROADWAY PLANS".

LEGEND:
- Existing Bridge
- O 36" CIDH Piling
- XX.X Bottom of Footing Elevation

UTILITIES:
1. AT&T OH
2. AT&T UG Conduit
3. PG&E 21kV Primary Voltage UG
4. PG&E 10" Transmission Main Gas Line
5. PG&E 4" Transmission Main Gas Line
6. PG&E 4.16KV Primary Voltage UG
7. PG&E 21kV Primary Voltage UG
8. AT&T UG Conduit
9. AT&T UG Conduit
10. 18" ø Storm Drain
11. 12" ø PVC Water Line

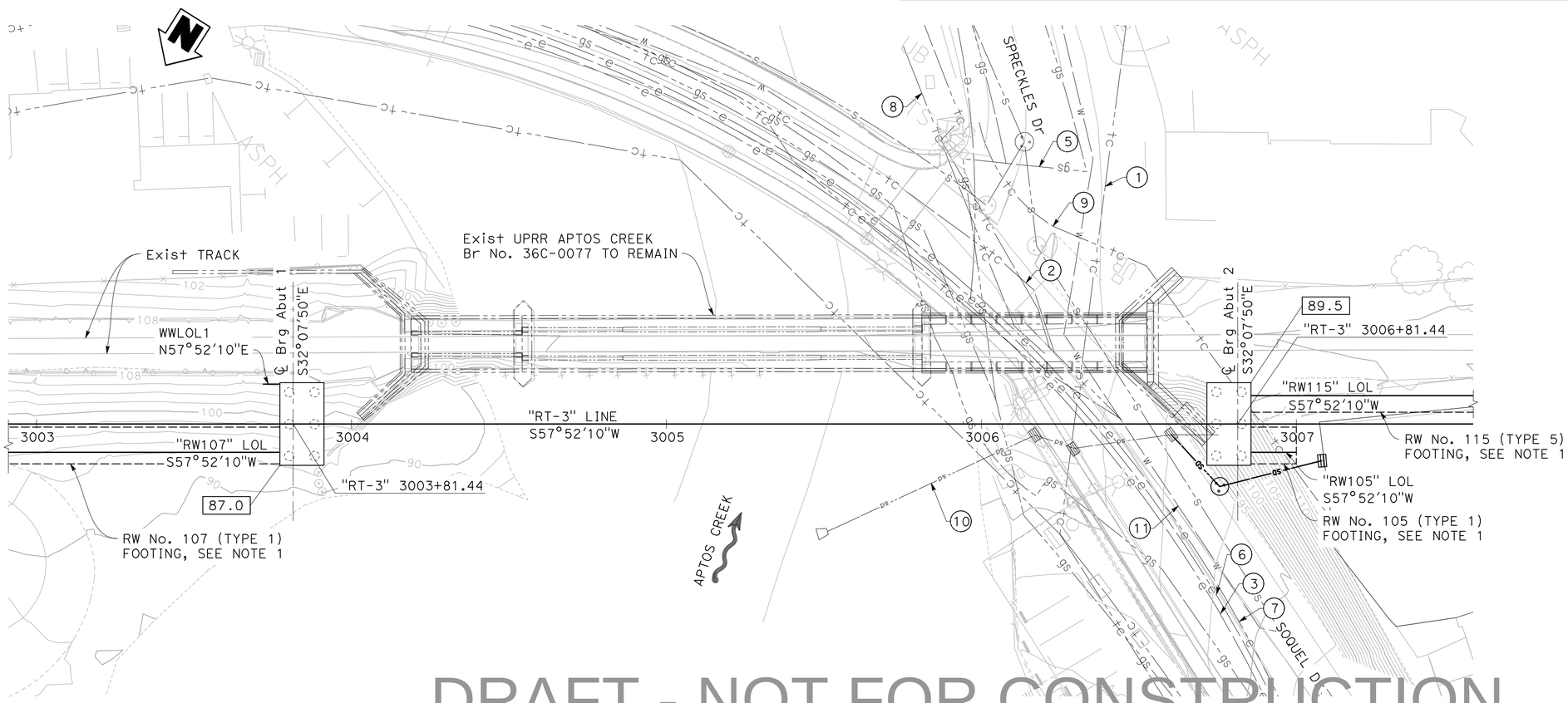

DRAFT - NOT FOR CONSTRUCTION

DESIGN OVERSIGHT	SCALE: 1" = 20'	VERT.DATUM X	HORZ.DATUM X	DESIGN	BY V. SHERBY	CHECKED X	PREPARED FOR THE STATE OF CALIFORNIA DEPARTMENT OF TRANSPORTATION	M. KLEYMANN PROJECT ENGINEER	BRIDGE No. 36-XXXX
SIGN OFF DATE	PHOTOGRAMMETRY AS OF: X	ALIGNMENT TIES:X		DETAILS	BY J. VALENZUELA	CHECKED X			POST MILE X
STRUCTURES FOUNDATION PLAN SHEET (ENGLISH) (REVISION 8/16/2021)	SURVEYED BY X	DRAFTED BY X		QUANTITIES	BY X	CHECKED X			APTOS CREEK PEDESTRIAN BRIDGE
	FIELD CHECKED BY X	CHECKED BY X							FOUNDATION PLAN

DATE PLOTTED => 4/1/2025 TIME PLOTTED => 12:03 PM
FILE => 04_Aptos Creek PB_FP.dwg USERNAME => JVALENZUELA
ORIGINAL SCALE IN INCHES FOR REDUCED PLANS 0 1 2 3

PROJECT NUMBER & PHASE:0518000116 COUNTY/ROUTE: SCR/1 CONTRACT No.: 05-0C734

DISREGARD PRINTS BEARING EARLIER REVISION DATES → REVISION DATES

SHEET 4 OF 39

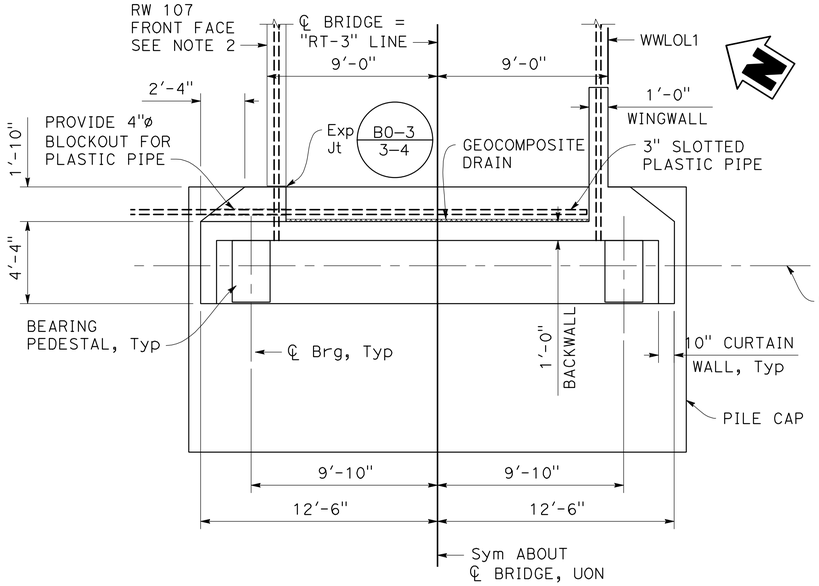

PLAN - ABUTMENT 1

1/4" = 1'-0"

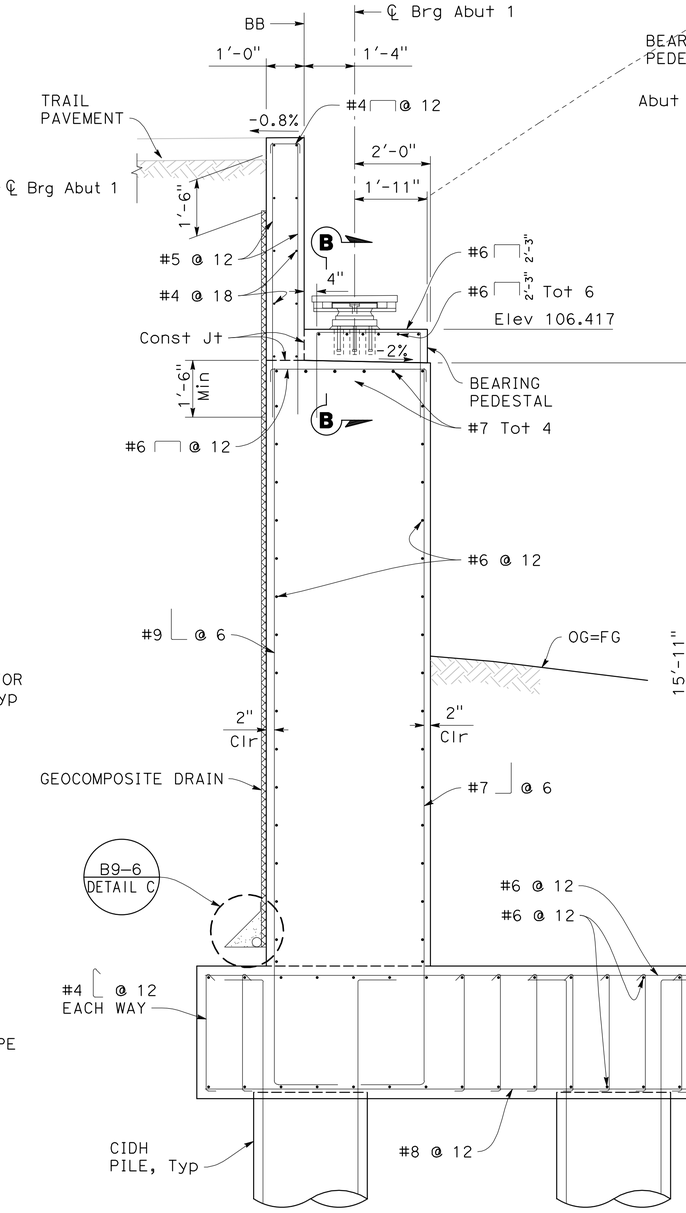

SECTION A-A

1/2" = 1'-0"

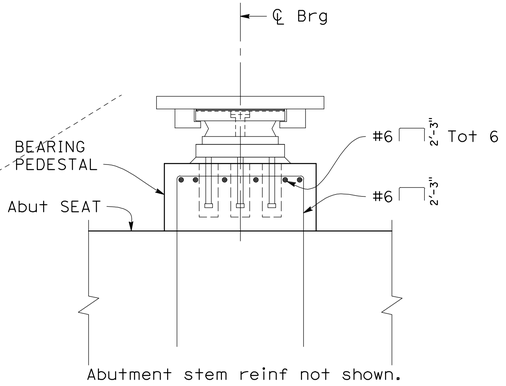

SECTION B-B

1" = 1'-0"

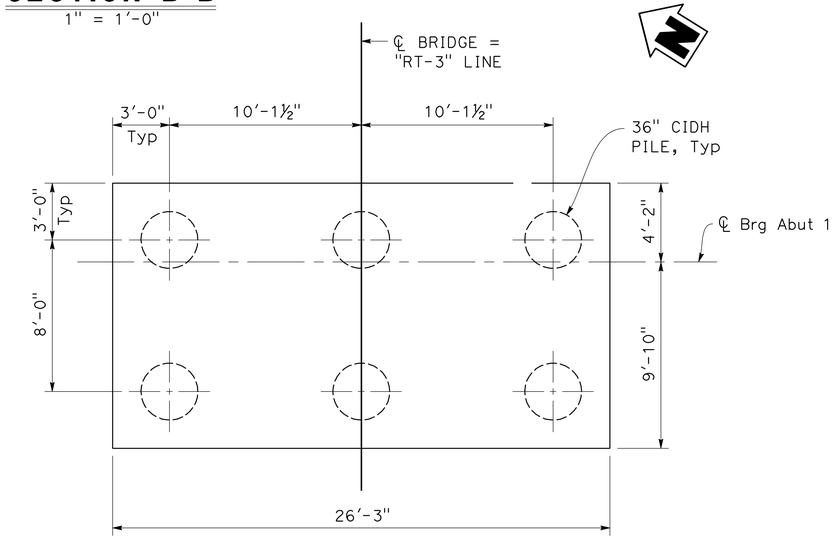

FOOTING PLAN

1/4" = 1'-0"

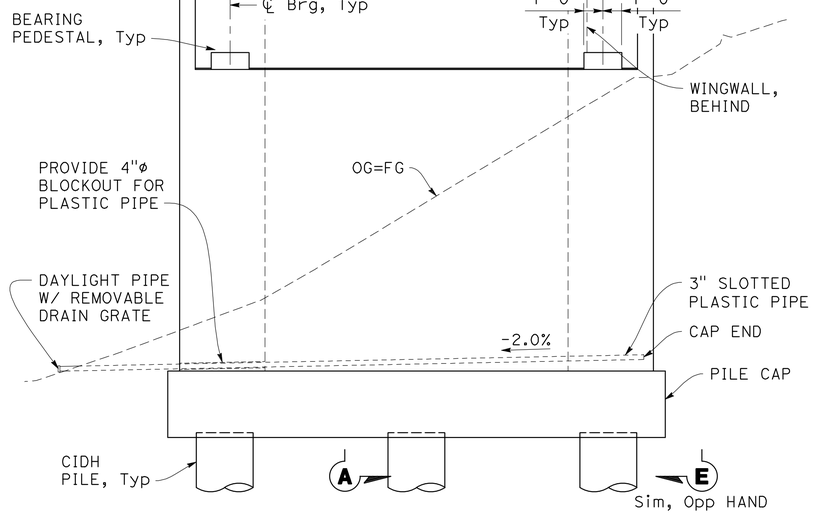

ELEVATION (LOOKING EAST)

1/4" = 1'-0"

NOTES:

1. For VIEW E-E, see "ABUTMENT DETAILS No. 1" sheet.
2. For Retaining Wall details, see "ROADWAY PLANS".
3. For additional information on conduit at bridge expansion joints, see "CONCRETE DECK DETAILS No. 2" sheet.
4. Construct backwall and curtain wall after erecting steel tied arch.

DRAFT - NOT FOR CONSTRUCTION

Dist	COUNTY	ROUTE	POST MILES TOTAL PROJECT	SHEET No.	TOTAL SHEETS
5	SCR	1	8.1/10.7	801	931

REGISTERED CIVIL ENGINEER DATE

PLANS APPROVAL DATE

REGISTERED PROFESSIONAL ENGINEER — MATTHEW KLEYMANN — No. 91100 — Exp. 3/31/26 — CIVIL — STATE OF CALIFORNIA

THE STATE OF CALIFORNIA OR ITS OFFICERS OR AGENTS SHALL NOT BE RESPONSIBLE FOR THE ACCURACY OR COMPLETENESS OF SCANNED COPIES OF THIS PLAN SHEET.

SCCRTC
1523 PACIFIC AVE
SANTA CRUZ, CA 95060

MARK THOMAS
701 UNIVERSITY AVE, STE 200
SACRAMENTO, CA 95825

DESIGN OVERSIGHT

SIGN OFF DATE

	BY	CHECKED
DESIGN	M. KLEYMANN	X
DETAILS	J. VALENZUELA	X
QUANTITIES	X	X

PREPARED FOR THE STATE OF CALIFORNIA DEPARTMENT OF TRANSPORTATION

M. KLEYMANN
PROJECT ENGINEER

BRIDGE No. 36-XXXX
POST MILE X

APTOS CREEK PEDESTRIAN BRIDGE

ABUTMENT 1 LAYOUT

STRUCTURES DESIGN DETAIL SHEET (ENGLISH) (REVISION 8/16/2021)

DATE PLOTTED => 4/1/2025 TIME PLOTTED => 12:04 PM
FILE => 05_Aptos Creek PB_AB1L.dwg USERNAME => JVALENZUELA

ORIGINAL SCALE IN INCHES FOR REDUCED PLANS 0 1 2 3

PROJECT NUMBER & PHASE:0518000116 COUNTY/ROUTE: SCR/1 CONTRACT No.: 05-0C734

DISREGARD PRINTS BEARING EARLIER REVISION DATES →

REVISION DATES

SHEET 5 OF 39

Dist	COUNTY	ROUTE	POST MILES TOTAL PROJECT	SHEET No.	TOTAL SHEETS
5	SCR	1	8.1/10.7	802	931

REGISTERED CIVIL ENGINEER DATE

PLANS APPROVAL DATE

REGISTERED PROFESSIONAL ENGINEER — MATTHEW KLEYMANN — No. 91100 — Exp. 3/31/26 — CIVIL — STATE OF CALIFORNIA

THE STATE OF CALIFORNIA OR ITS OFFICERS OR AGENTS SHALL NOT BE RESPONSIBLE FOR THE ACCURACY OR COMPLETENESS OF SCANNED COPIES OF THIS PLAN SHEET.

SCCRTC
1523 PACIFIC AVE
SANTA CRUZ, CA 95060

MARK THOMAS
701 UNIVERSITY AVE, STE 200
SACRAMENTO, CA 95825

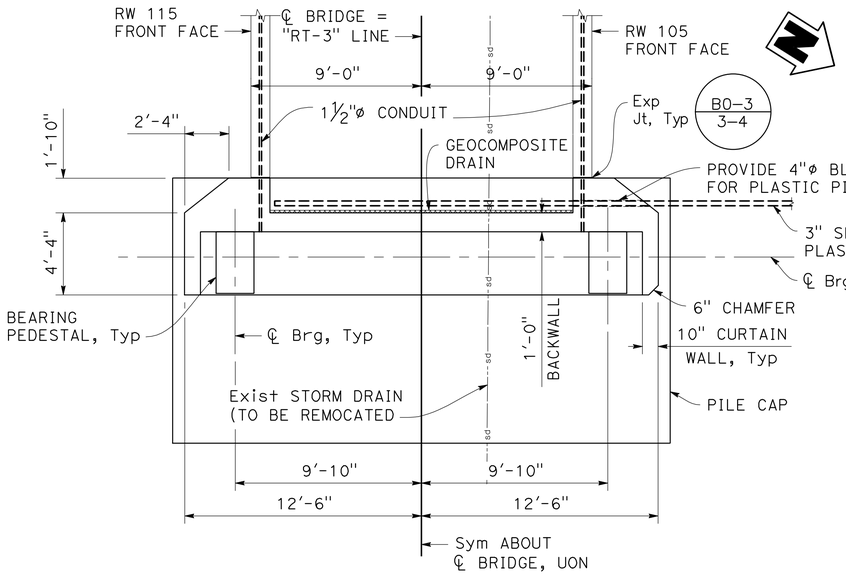

PLAN - ABUTMENT 2

1/4" = 1'-0"

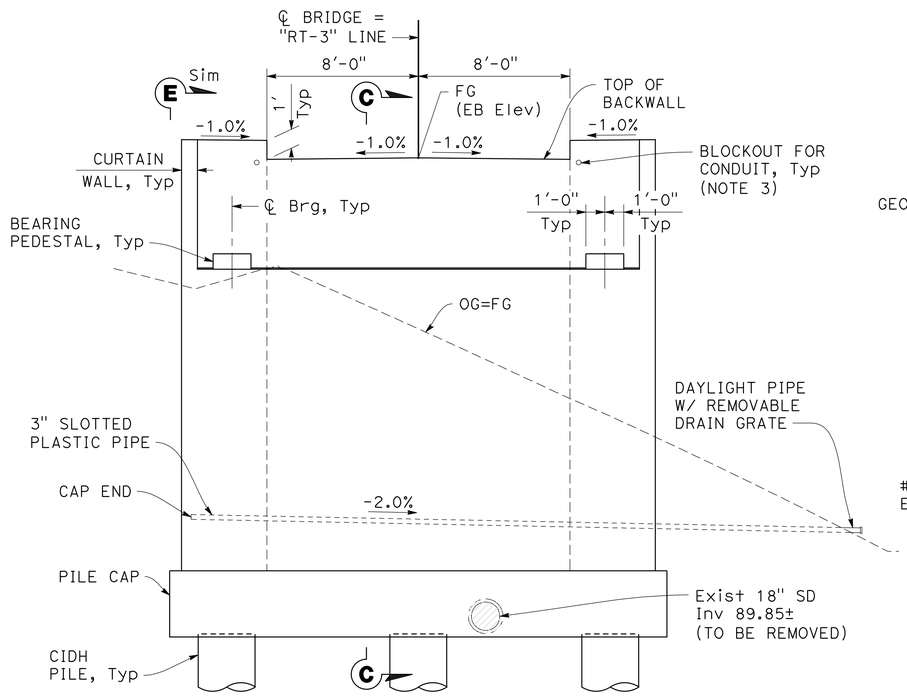

ELEVATION (LOOKING WEST)

1/4" = 1'-0"

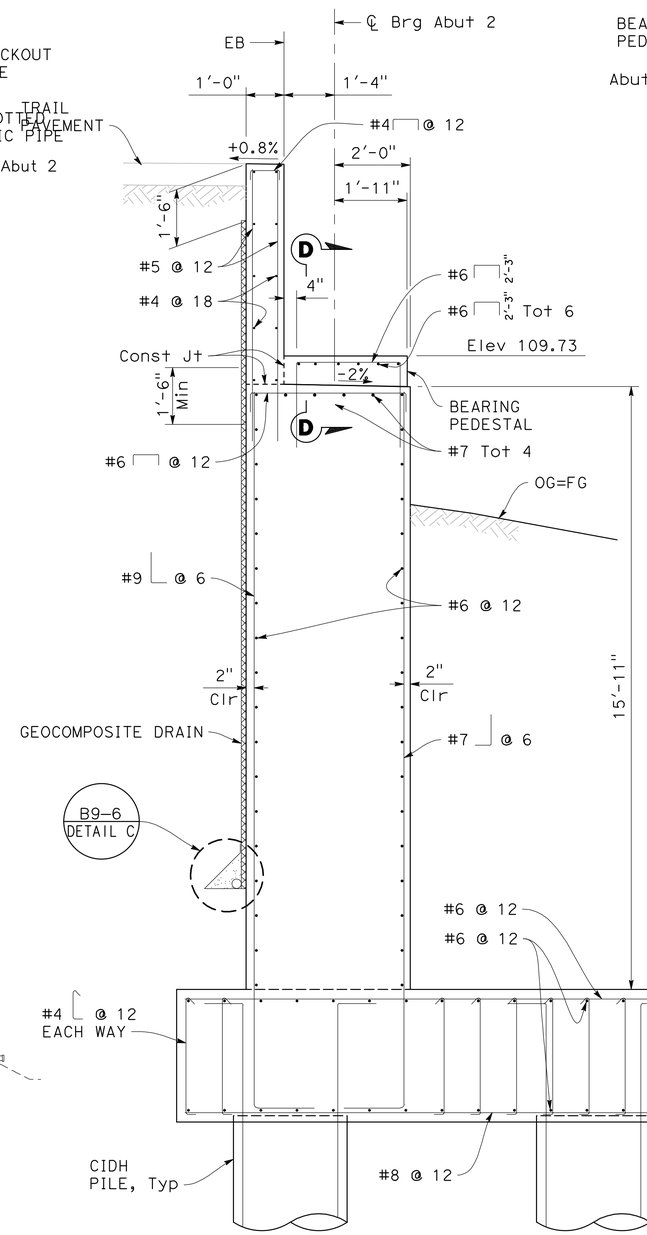

SECTION C-C

1/2" = 1'-0"

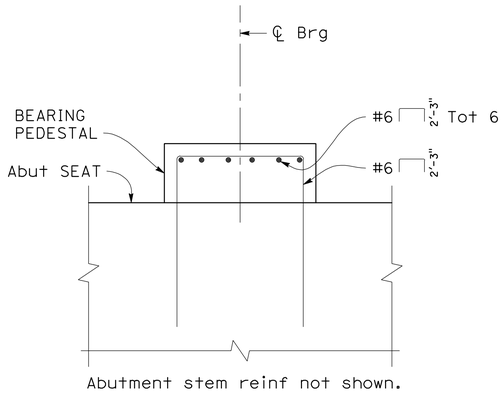

Abutment stem reinf not shown.

SECTION D-D

1" = 1'-0"

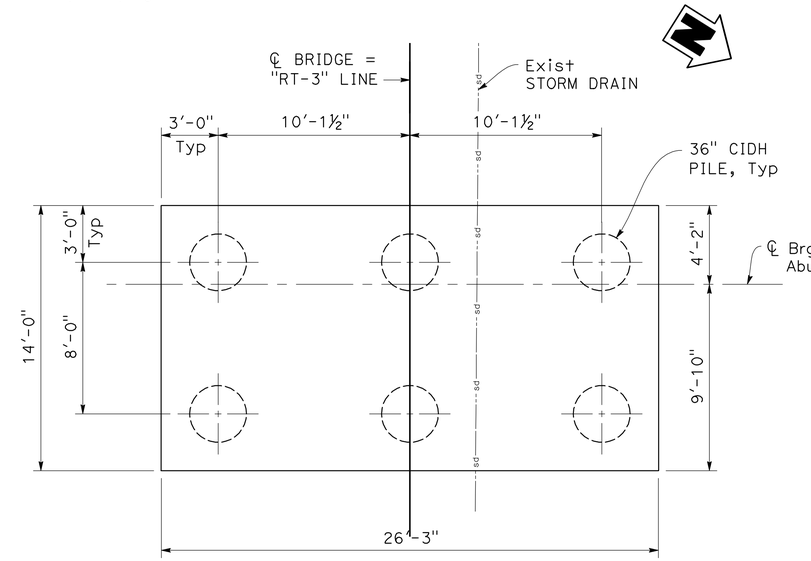

FOOTING PLAN

1/4" = 1'-0"

NOTES:

1. For VIEW E-E. see "ABUTMENT DETAILS No. 1" sheet.
2. For Retaining Wall details, see "ROADWAY PLANS"
3. For additional information on conduit at bridge expansion joints, see "CONCRETE DECK DETAILS No. 2" sheet.
4. Construct backwall and curtain wall after erecting steel tied arch.

DRAFT - NOT FOR CONSTRUCTION

DESIGN OVERSIGHT

SIGN OFF DATE

	BY	CHECKED
DESIGN	M. KLEYMANN	X
DETAILS	J. VALENZUELA	X
QUANTITIES	X	X

PREPARED FOR THE STATE OF CALIFORNIA DEPARTMENT OF TRANSPORTATION

M. KLEYMANN
PROJECT ENGINEER

BRIDGE No. 36-XXXX
POST MILE X

APTOS CREEK PEDESTRIAN BRIDGE

ABUTMENT 2 LAYOUT

STRUCTURES DESIGN DETAIL SHEET (ENGLISH) (REVISION 8/16/2021)

DATE PLOTTED => 4/1/2025
FILE => 06_Aptos Creek PB_AB2L.dwg

TIME PLOTTED => 12:06 PM
USERNAME => JVALENZUELA

ORIGINAL SCALE IN INCHES FOR REDUCED PLANS 0 1 2 3

PROJECT NUMBER & PHASE: 0518000116

COUNTY/ROUTE: SCR/1
CONTRACT No.: 05-0C734

DISREGARD PRINTS BEARING EARLIER REVISION DATES

REVISION DATES	SHEET	OF
	6	39

Dist	COUNTY	ROUTE	POST MILES TOTAL PROJECT	SHEET No.	TOTAL SHEETS
5	SCR	1	8.1/10.7	803	931

REGISTERED CIVIL ENGINEER DATE

PLANS APPROVAL DATE

REGISTERED PROFESSIONAL ENGINEER — MATTHEW KLEYMANN — No. 91100 — Exp. 3/31/26 — CIVIL — STATE OF CALIFORNIA

THE STATE OF CALIFORNIA OR ITS OFFICERS OR AGENTS SHALL NOT BE RESPONSIBLE FOR THE ACCURACY OR COMPLETENESS OF SCANNED COPIES OF THIS PLAN SHEET.

SCCRTC
1523 PACIFIC AVE
SANTA CRUZ, CA 95060

MARK THOMAS
701 UNIVERSITY AVE, STE 200
SACRAMENTO, CA 95825

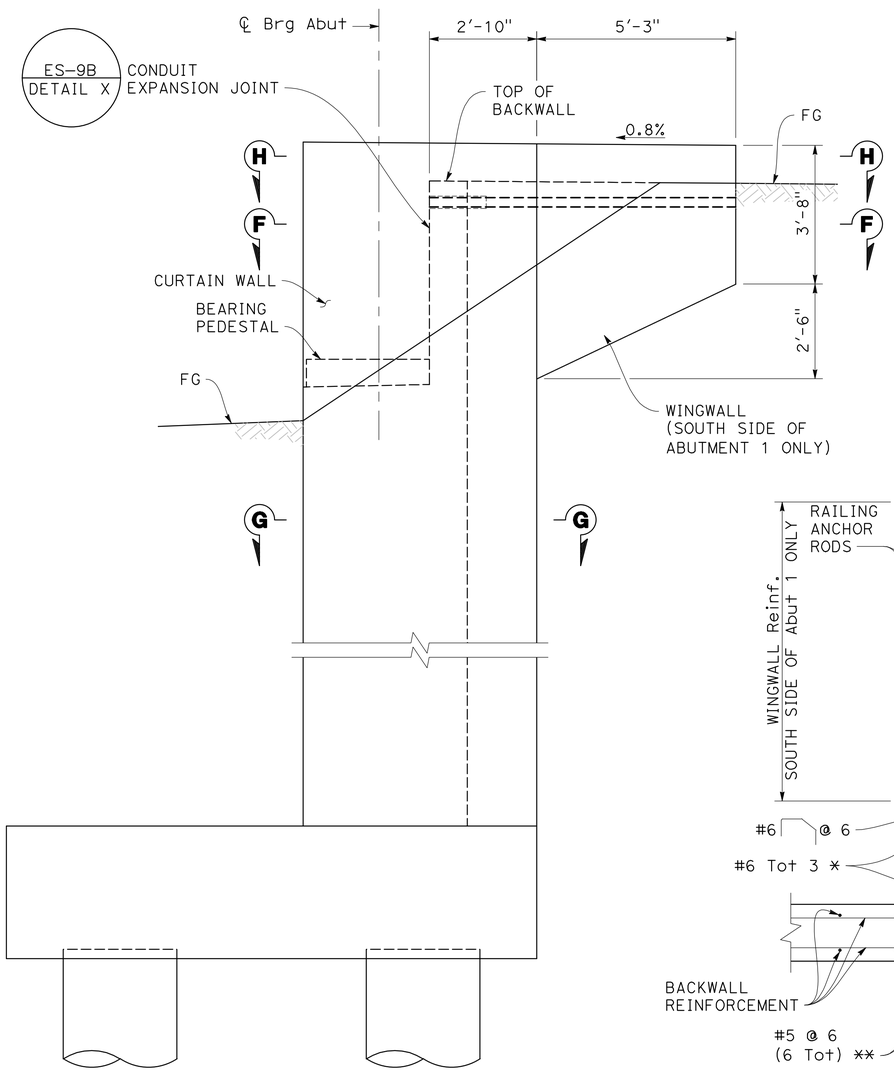

VIEW E-E
1/2" = 1'-0"

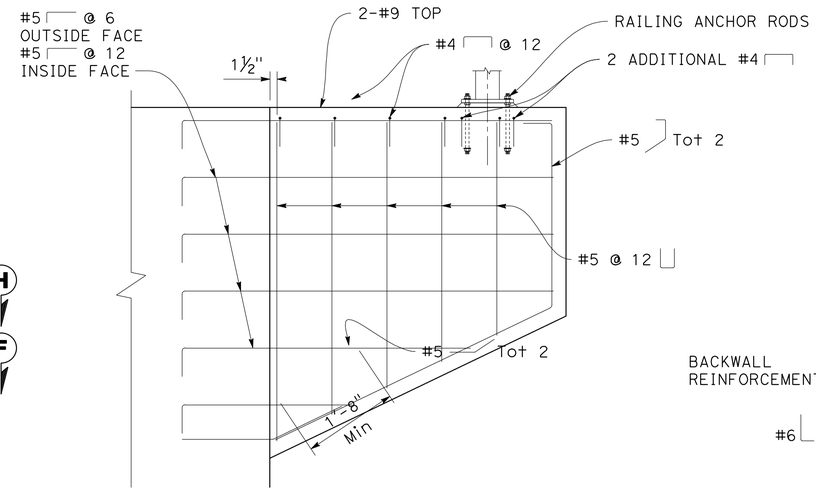

WINGWALL ELEVATION
3/4" = 1'-0"

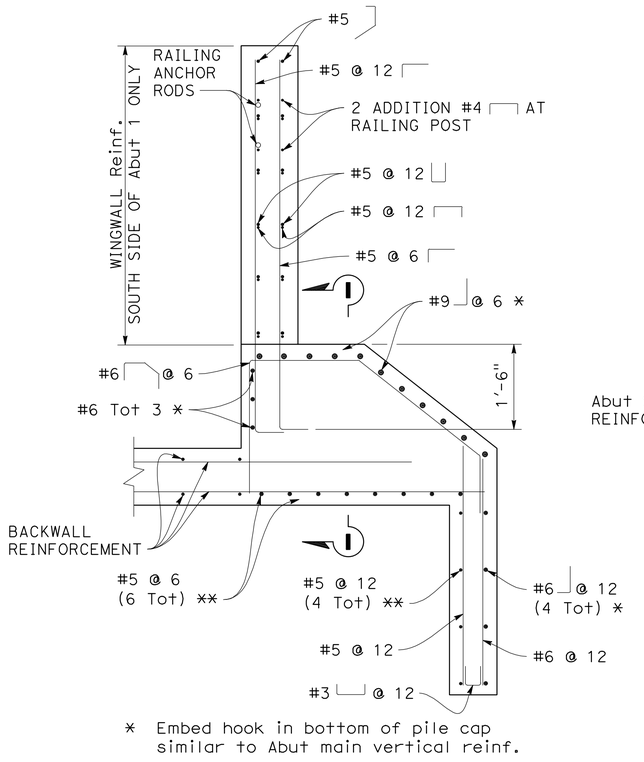

* Embed hook in bottom of pile cap similar to Abut main vertical reinf.

** Length to match typical backwall front face reinforcement.

SECTION F-F
3/4" = 1'-0"

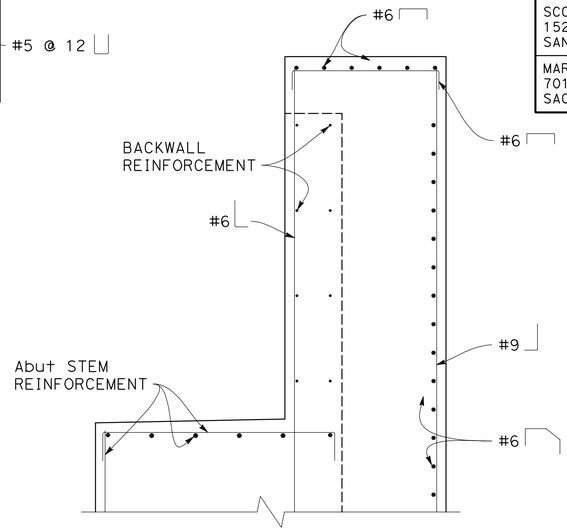

SECTION I-I
3/4" = 1'-0"

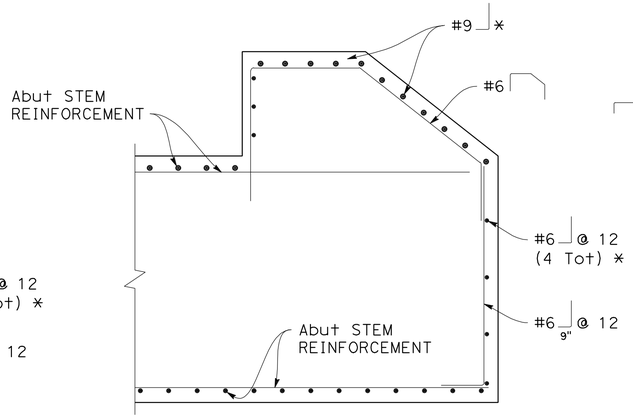

* Embed hook in bottom of pile cap similar to Abut main vertical reinf.

SECTION G-G
3/4" = 1'-0"

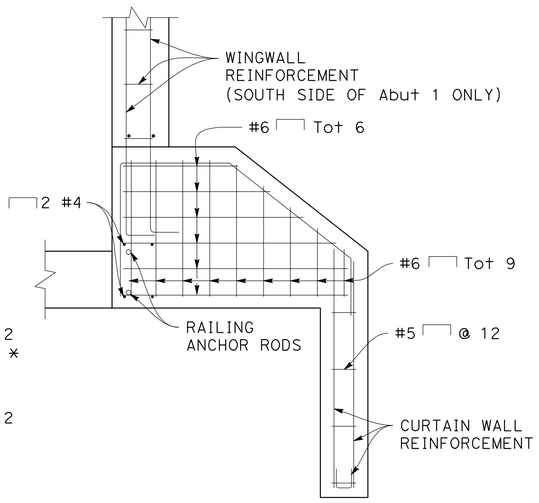

Vertical Main Reinf not shown for clarity.

SECTION H-H
3/4" = 1'-0"

DRAFT - NOT FOR CONSTRUCTION

DESIGN OVERSIGHT		DESIGN	BY M. KLEYMANN	CHECKED X	PREPARED FOR THE STATE OF CALIFORNIA DEPARTMENT OF TRANSPORTATION
SIGN OFF DATE		DETAILS	BY J. VALENZUELA	CHECKED X	M. KLEYMANN, PROJECT ENGINEER
		QUANTITIES	BY X	CHECKED X	BRIDGE No. 36-XXXX; POST MILE X

APTOS CREEK PEDESTRIAN BRIDGE
ABUTMENT DETAIL No. 1

STRUCTURES DESIGN DETAIL SHEET (ENGLISH) (REVISION 8/16/2021)

DATE PLOTTED => 4/1/2025 TIME PLOTTED => 12:07 PM
FILE => 07_Aptos Creek PB_ADT1.dwg USERNAME => JVALENZUELA

ORIGINAL SCALE IN INCHES FOR REDUCED PLANS 0 1 2 3

PROJECT NUMBER & PHASE:0518000116 COUNTY/ROUTE: SCR/1 CONTRACT No.: 05-0C734

DISREGARD PRINTS BEARING EARLIER REVISION DATES →

REVISION DATES	SHEET	OF
	7	39

Dist	COUNTY	ROUTE	POST MILES TOTAL PROJECT	SHEET No.	TOTAL SHEETS
5	SCR	1	8.1/10.7	804	931

REGISTERED CIVIL ENGINEER DATE

PLANS APPROVAL DATE

REGISTERED PROFESSIONAL ENGINEER — MATTHEW KLEYMANN — No. 91100 — Exp. 3/31/26 — CIVIL — STATE OF CALIFORNIA

THE STATE OF CALIFORNIA OR ITS OFFICERS OR AGENTS SHALL NOT BE RESPONSIBLE FOR THE ACCURACY OR COMPLETENESS OF SCANNED COPIES OF THIS PLAN SHEET.

SCCRTC
1523 PACIFIC AVE
SANTA CRUZ, CA 95060

MARK THOMAS
701 UNIVERSITY AVE, STE 200
SACRAMENTO, CA 95825

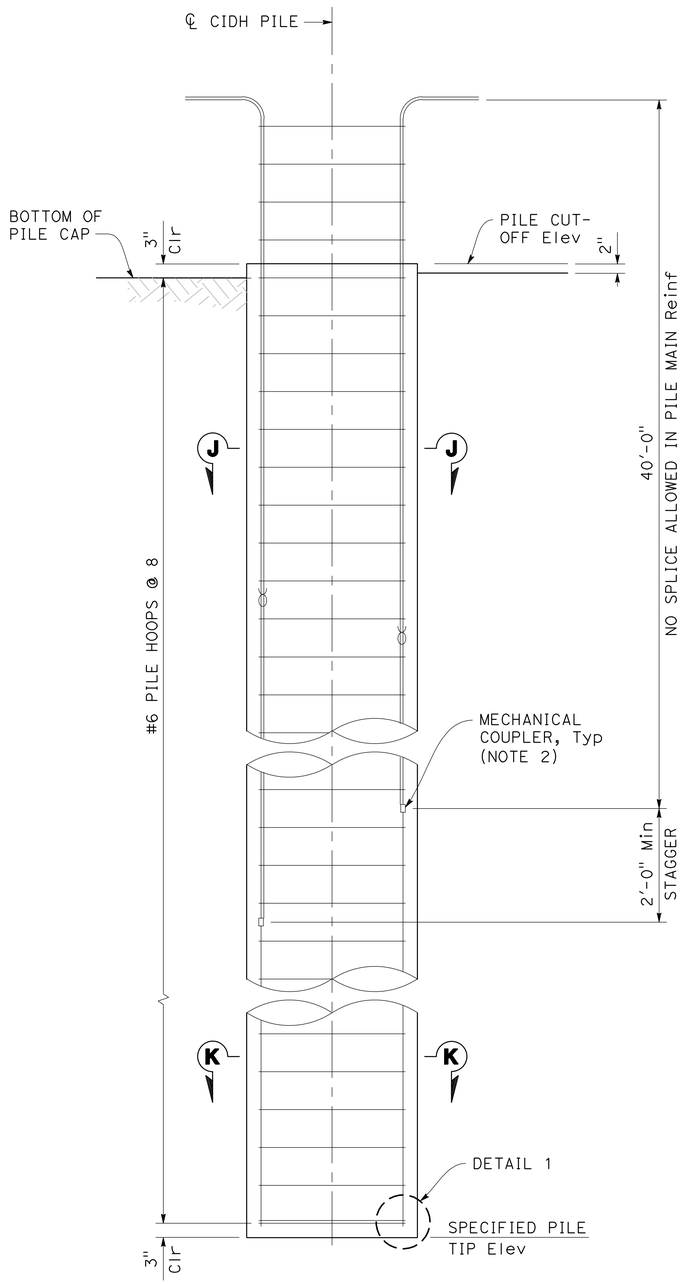

CIDH PILE ELEVATION

3/4" = 1'-0"

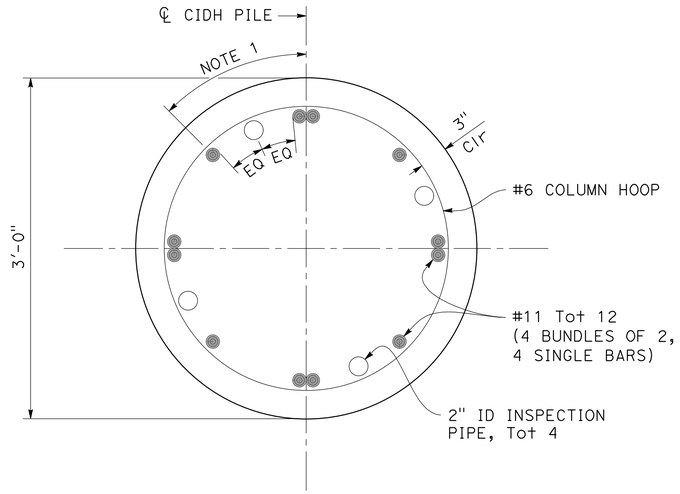

SECTION J-J

1 1/2" = 1'-0"

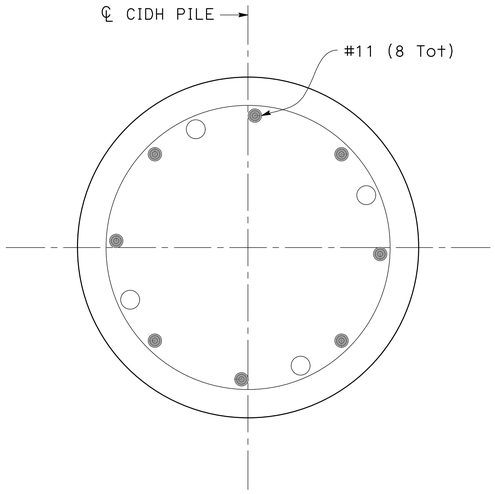

For details not shown, see "SECTION J-J"

SECTION K-K

1 1/2" = 1'-0"

NOTES:

1. Space main bars, measured from center of bar to center of bundled bars, equally around pile.
2. All hoops must be continuous with ultimate butt splice per Caltrans Specification 52-6.
3. Lap splices of vertical reinforcement are not allowed anywhere within the CIDH piles. Only mechanical couplers are allowed and couplers must be placed at the locations shown. No couplers for the vertical reinforcement are allowed with the area designated as "no splice zone". Couplers must be ultimate mechanical couplers per Caltrans Standard Specification and Authorized Material List. Diameter of coupler shall not exceed 3".

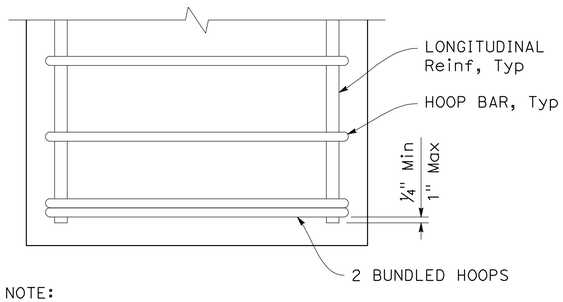

NOTE:
At contact surfaces of bundled hoops, grind weld flush with bar surface.

DETAIL 1 - HOOP TERMINATION

NO SCALE

DRAFT - NOT FOR CONSTRUCTION

DESIGN OVERSIGHT	DESIGN	BY M. KLEYMANN	CHECKED X	PREPARED FOR THE STATE OF CALIFORNIA DEPARTMENT OF TRANSPORTATION	M. KLEYMANN, PROJECT ENGINEER
SIGN OFF DATE	DETAILS	BY J. VALENZUELA	CHECKED X		BRIDGE No. 36-XXXX; POST MILE X
	QUANTITIES	BY X	CHECKED X		APTOS CREEK PEDESTRIAN BRIDGE; ABUTMENT DETAIL No. 2

STRUCTURES DESIGN DETAIL SHEET (ENGLISH) (REVISION 8/16/2021)

DATE PLOTTED => 4/1/2025 TIME PLOTTED => 12:09 PM ORIGINAL SCALE IN INCHES FOR REDUCED PLANS 0 1 2 3
FILE => 08_Aptos Creek PB_ADT2.dwg USERNAME => JVALENZUELA

PROJECT NUMBER & PHASE:0518000116 COUNTY/ROUTE:SCR/1 CONTRACT No.:05-0C734

DISREGARD PRINTS BEARING EARLIER REVISION DATES

REVISION DATES | SHEET 8 | OF 39

Dist	COUNTY	ROUTE	POST MILES TOTAL PROJECT	SHEET No.	TOTAL SHEETS
5	SCR	1	8.1/10.7	805	931

REGISTERED CIVIL ENGINEER DATE

PLANS APPROVAL DATE

REGISTERED PROFESSIONAL ENGINEER
MATTHEW KLEYMANN
No. 91100
Exp. 3/31/26
CIVIL
STATE OF CALIFORNIA

THE STATE OF CALIFORNIA OR ITS OFFICERS OR AGENTS SHALL NOT BE RESPONSIBLE FOR THE ACCURACY OR COMPLETENESS OF SCANNED COPIES OF THIS PLAN SHEET.

SCCRTC
1523 PACIFIC AVE
SANTA CRUZ, CA 95060

MARK THOMAS
701 UNIVERSITY AVE, STE 200
SACRAMENTO, CA 95825

SHEET PLACEHOLDER

DRAFT - NOT FOR CONSTRUCTION

DESIGN OVERSIGHT

SIGN OFF DATE

	BY	CHECKED
DESIGN	M. KLEYMANN	X
DETAILS	J. VALENZUELA	X
QUANTITIES	X	X

PREPARED FOR THE
STATE OF CALIFORNIA
DEPARTMENT OF TRANSPORTATION

M. KLEYMANN
PROJECT ENGINEER

BRIDGE No. 36-XXXX
POST MILE X

APTOS CREEK PEDESTRIAN BRIDGE
ABUTMENT DETAIL No. 3

STRUCTURES DESIGN DETAIL SHEET (ENGLISH) (REVISION 8/16/2021)

DATE PLOTTED => 4/1/2025 TIME PLOTTED => 12:10 PM
FILE => 09_Aptos Creek PB_ADT3.dwg USERNAME => JVALENZUELA

ORIGINAL SCALE IN INCHES FOR REDUCED PLANS 0 1 2 3

PROJECT NUMBER & PHASE:0518000116
COUNTY/ROUTE:SCR/1
CONTRACT No.:05-0C734

DISREGARD PRINTS BEARING EARLIER REVISION DATES

REVISION DATES					SHEET	OF
					9	39

Dist	COUNTY	ROUTE	POST MILES TOTAL PROJECT	SHEET No.	TOTAL SHEETS
5	SCR	1	8.1/10.7	----	931

REGISTERED CIVIL ENGINEER DATE

PLANS APPROVAL DATE

REGISTERED PROFESSIONAL ENGINEER — MATTHEW KLEYMANN — No. 91100 — Exp. 3/31/26 — CIVIL — STATE OF CALIFORNIA

THE STATE OF CALIFORNIA OR ITS OFFICERS OR AGENTS SHALL NOT BE RESPONSIBLE FOR THE ACCURACY OR COMPLETENESS OF SCANNED COPIES OF THIS PLAN SHEET.

SCCRTC
1523 PACIFIC AVE
SANTA CRUZ, CA 95060

MARK THOMAS
701 UNIVERSITY AVE, STE 200
SACRAMENTO, CA 95825

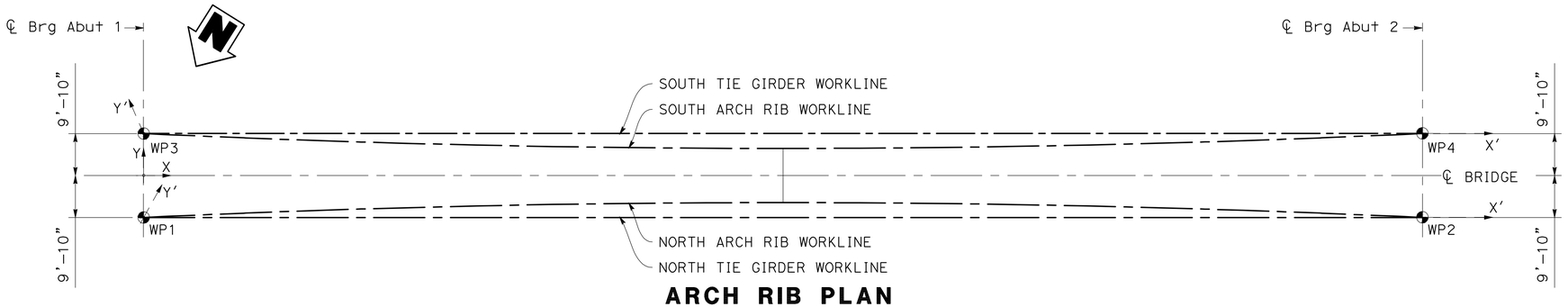

ARCH RIB PLAN

NO SCALE

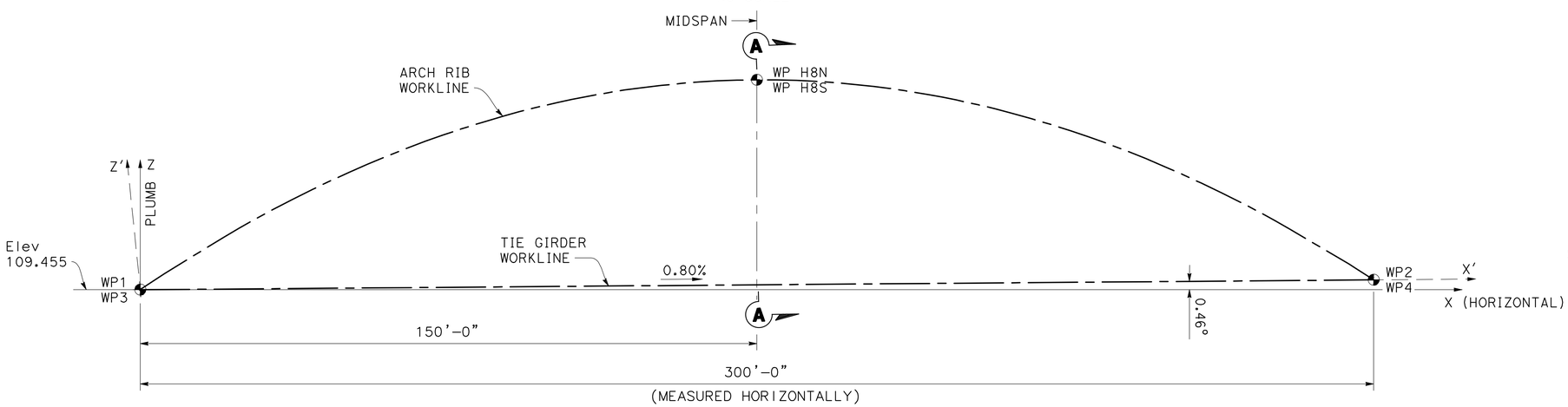

ARCH RIB ELEVATION

NO SCALE

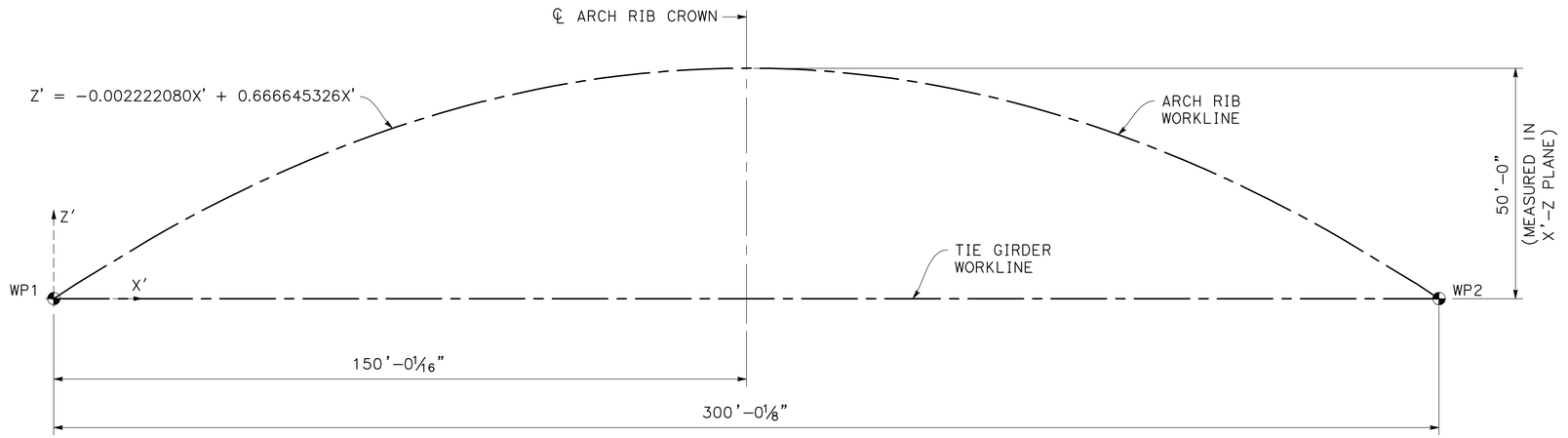

NORTH ARCH RIB SHOWN, SOUTH ARCH RIB SIMILAR

ARCH RIB IN LOCAL COORDINATE SYSTEM

NO SCALE

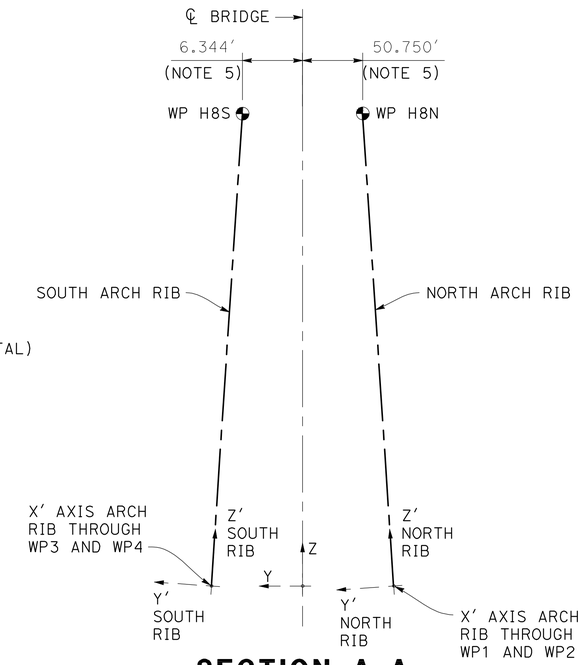

SECTION A-A
NORMAL TO X' AXIS

NO SCALE

NOTES:

1. X, Y, Z are the global axes in horizontal and vertical plans X', Y', Z' are the Arch Rib local axes in the plane of the Arch Rib.
2. All Workpoints are along the arch rib workline in the global X, Y, Z coordinate system.
3. Workpoint 0,0,0 corresponds to the intersection of a vertical plane through the centerline of the bridge and a straight line through WP1 and WP3.
4. For Arch Rib Workpoint coordinates, see "ARCH GEOMETRY AND LAYOUT No. 2" sheet.
5. Dimension measured along global Y axis.

DRAFT NOT FOR CONSTRUCTION

DESIGN OVERSIGHT		DESIGN	BY M. KLEYMANN	CHECKED X	PREPARED FOR THE STATE OF CALIFORNIA DEPARTMENT OF TRANSPORTATION
SIGN OFF DATE		DETAILS	BY J. VALENZUELA	CHECKED X	M. KLEYMANN, PROJECT ENGINEER
		QUANTITIES	BY X	CHECKED X	BRIDGE No. 36-XXXX; POST MILE X

APTOS CREEK PEDESTRIAN BRIDGE

ARCH RIB GEOMETRY AND LAYOUT No. 1

STRUCTURES DESIGN DETAIL SHEET (ENGLISH) (REVISION 8/16/2021)

DATE PLOTTED => 4/1/2025 TIME PLOTTED => 12:11 PM
FILE => 10_Aptos Creek PB_AGL1.dwg USERNAME => JVALENZUELA

ORIGINAL SCALE IN INCHES FOR REDUCED PLANS 0 1 2 3

PROJECT NUMBER & PHASE:0518000116 COUNTY/ROUTE:SCR/1 CONTRACT No.:05-0C734

DISREGARD PRINTS BEARING EARLIER REVISION DATES → REVISION DATES

SHEET 10 OF 39

Dist	COUNTY	ROUTE	POST MILES TOTAL PROJECT	SHEET No.	TOTAL SHEETS
5	SCR	1	8.1/10.7	----	931

REGISTERED CIVIL ENGINEER DATE

PLANS APPROVAL DATE

REGISTERED PROFESSIONAL ENGINEER — MATTHEW KLEYMANN — No. 91100 — Exp. 3/31/26 — CIVIL — STATE OF CALIFORNIA

THE STATE OF CALIFORNIA OR ITS OFFICERS OR AGENTS SHALL NOT BE RESPONSIBLE FOR THE ACCURACY OR COMPLETENESS OF SCANNED COPIES OF THIS PLAN SHEET.

SCCRTC
1523 PACIFIC AVE
SANTA CRUZ, CA 95060

MARK THOMAS
701 UNIVERSITY AVE, STE 200
SACRAMENTO, CA 95825

NORTH ARCH RIB

WP	GLOBAL COORDINATES (FEET)			CAMBER (FEET)		
	X	Y	Z	ΔX	ΔY	ΔZ
WP1	0.000	-9.833	0.000	0.000	0.000	0.001
AS1N	7.000	-9.514	4.626	-0.010	0.001	0.018
H1N	24.000	-8.802	14.942	-0.030	0.002	0.059
H2N	42.000	-8.147	24.450	-0.037	0.005	0.080
AS2N	51.000	-7.858	28.659	-0.035	0.005	0.080
H3N	60.000	-7.594	32.505	-0.032	0.005	0.081
H4N	78.000	-7.142	39.110	-0.023	0.005	0.072
H5N	96.000	-6.792	44.266	-0.014	0.005	0.059
H6N	114.000	-6.542	47.978	-0.006	0.005	0.049
AS3N	123.000	-6.455	49.294	-0.003	0.005	0.042
H7N	132.000	-6.393	50.249	-0.001	0.005	0.044
H8N	150.000	-6.345	51.079	0.004	0.005	0.046
H9N	168.000	-6.398	50.474	0.009	0.005	0.056
AS4N	177.000	-6.462	49.633	0.012	0.005	0.060
H10N	186.000	-6.550	48.434	0.016	0.005	0.072
H11N	204.000	-6.803	44.964	0.025	0.005	0.090
H12N	222.000	-7.156	40.065	0.035	0.005	0.107
H13N	240.000	-7.608	33.741	0.043	0.005	0.115
AS5N	249.000	-7.872	30.046	0.045	0.005	0.111
H14N	258.000	-8.160	25.994	0.045	0.005	0.108
H15N	276.000	-8.811	16.827	0.034	0.002	0.077
AS6N	293.000	-9.517	6.868	0.007	0.001	0.024
WP2	300.000	-9.833	2.400	-0.006	0.000	0.001

SOUTH ARCH RIB

WP	GLOBAL COORDINATES (FEET)			CAMBER (FEET)		
	X	Y	Z	ΔX	ΔY	ΔZ
WP1	0.000	9.833	0.000	0.000	0.000	0.001
AS1S	7.000	9.514	4.626	-0.010	-0.001	0.018
H1S	24.000	8.802	14.942	-0.030	-0.002	0.059
H2S	42.000	8.147	24.450	-0.037	-0.005	0.080
AS2S	51.000	7.858	28.659	-0.035	-0.005	0.080
H3S	60.000	7.594	32.505	-0.032	-0.005	0.081
H4S	78.000	7.142	39.110	-0.023	-0.005	0.072
H5S	96.000	6.792	44.266	-0.014	-0.005	0.059
H6S	114.000	6.542	47.978	-0.006	-0.005	0.049
AS3S	123.000	6.455	49.294	-0.003	-0.005	0.042
H7S	132.000	6.393	50.249	-0.001	-0.005	0.044
H8S	150.000	6.345	51.079	0.004	-0.005	0.046
H9S	168.000	6.398	50.474	0.009	-0.005	0.056
AS4S	177.000	6.462	49.633	0.012	-0.005	0.060
H10S	186.000	6.550	48.434	0.016	-0.005	0.072
H11S	204.000	6.803	44.964	0.025	-0.005	0.090
H12S	222.000	7.156	40.065	0.035	-0.005	0.107
H13S	240.000	7.608	33.741	0.043	-0.005	0.115
AS5S	249.000	7.872	30.046	0.045	-0.005	0.111
H14S	258.000	8.160	25.994	0.045	-0.005	0.108
H15S	276.000	8.811	16.827	0.034	-0.002	0.077
AS6S	293.000	9.517	6.868	0.007	-0.001	0.024
WP2	300.000	9.833	2.400	-0.006	0.000	0.001

NOTES:

1. For workpoint definition, see "ARCH PLAN AND ELEVATION" sheet.
2. Camber values shown are offsets measured in global coordinate system.
3. Camber values account for all dead loads and long term effects such that arch rib and tie girder match the theoretical workpoint coordinates provided at Day 10,000 at 60 F.
4. Tie girder is not cambered in the Z direction and shall be fabricated based on a straight line between WP1 and WP2 or WP3 and WP4.
5. Arch rib shall be curved and based on a parabola fit through the provided cambered work points.

DRAFT - NOT FOR CONSTRUCTION

DESIGN OVERSIGHT

SIGN OFF DATE

	BY	CHECKED
DESIGN	M. KLEYMANN	X
DETAILS	J. VALENZUELA	X
QUANTITIES	X	X

PREPARED FOR THE STATE OF CALIFORNIA DEPARTMENT OF TRANSPORTATION

M. KLEYMANN
PROJECT ENGINEER

BRIDGE No. 36-XXXX
POST MILE X

APTOS CREEK PEDESTRIAN BRIDGE

ARCH RIB GEOMETRY AND LAYOUT No. 2

STRUCTURES DESIGN DETAIL SHEET (ENGLISH) (REVISION 8/16/2021)

DATE PLOTTED => 4/1/2025 TIME PLOTTED => 12:12 PM
FILE => 11_Aptos Creek PB_AGL2.dwg USERNAME => JVALENZUELA

ORIGINAL SCALE IN INCHES FOR REDUCED PLANS 0 1 2 3

PROJECT NUMBER & PHASE:0518000116
COUNTY/ROUTE: SCR/1
CONTRACT No.: 05-0C734

DISREGARD PRINTS BEARING EARLIER REVISION DATES

REVISION DATES

SHEET 11 OF 39

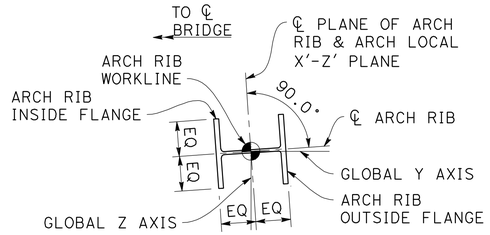

SECTION A-A
3/4" = 1'-0"

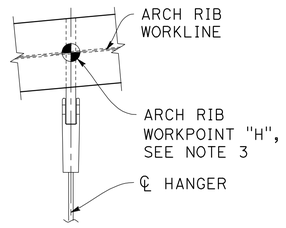

DETAIL 1
3/4" = 1'-0"

LEGEND:

(H1N) Hanger Number

AS1N Arch Rib Field Splice Number

NOTES:

1. Additional arch rib welded splices may be added as required to facilitate fabrication and construction. Welded splices may be performed in the shop or field. Where used, arch rib welded splices must be complete joint penetration welds and their locations shown on the shop drawings.
2. Plane of Hangers is parallel to global Y-Z plane as defined on "ARCH GEOMETRY AND LAYOUT" sheet.
3. Arch rib workpoints "H" (e.g. H3N) correspond to intersection of arch rib workline and centerline of hanger.
4. For Arch Knuckle details, see "ARCH RIB DETAILS No. 2" sheet.

Dist	COUNTY	ROUTE	POST MILES TOTAL PROJECT	SHEET No.	TOTAL SHEETS
5	SCR	1	8.1/10.7	----	931

REGISTERED CIVIL ENGINEER DATE

PLANS APPROVAL DATE

REGISTERED PROFESSIONAL ENGINEER — MATTHEW KLEYMANN — No. 91100 — Exp. 3/31/26 — CIVIL — STATE OF CALIFORNIA

THE STATE OF CALIFORNIA OR ITS OFFICERS OR AGENTS SHALL NOT BE RESPONSIBLE FOR THE ACCURACY OR COMPLETENESS OF SCANNED COPIES OF THIS PLAN SHEET.

SCCRTC
1523 PACIFIC AVE
SANTA CRUZ, CA 95060

MARK THOMAS
701 UNIVERSITY AVE, STE 200
SACRAMENTO, CA 95825

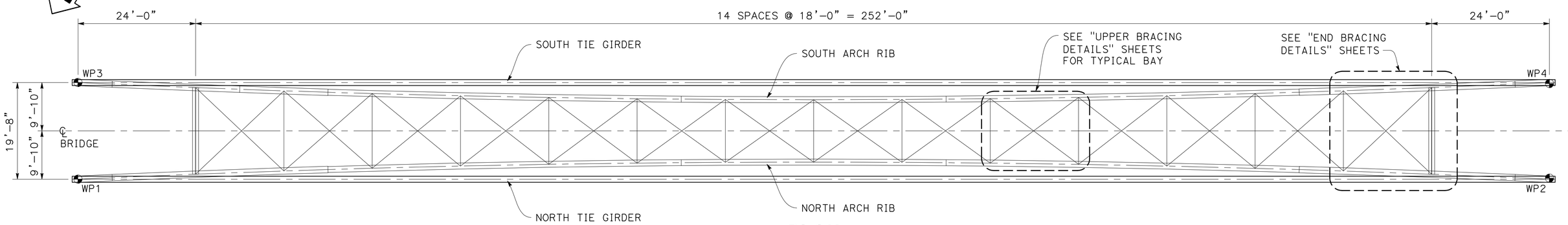

PLAN
1" = 10'

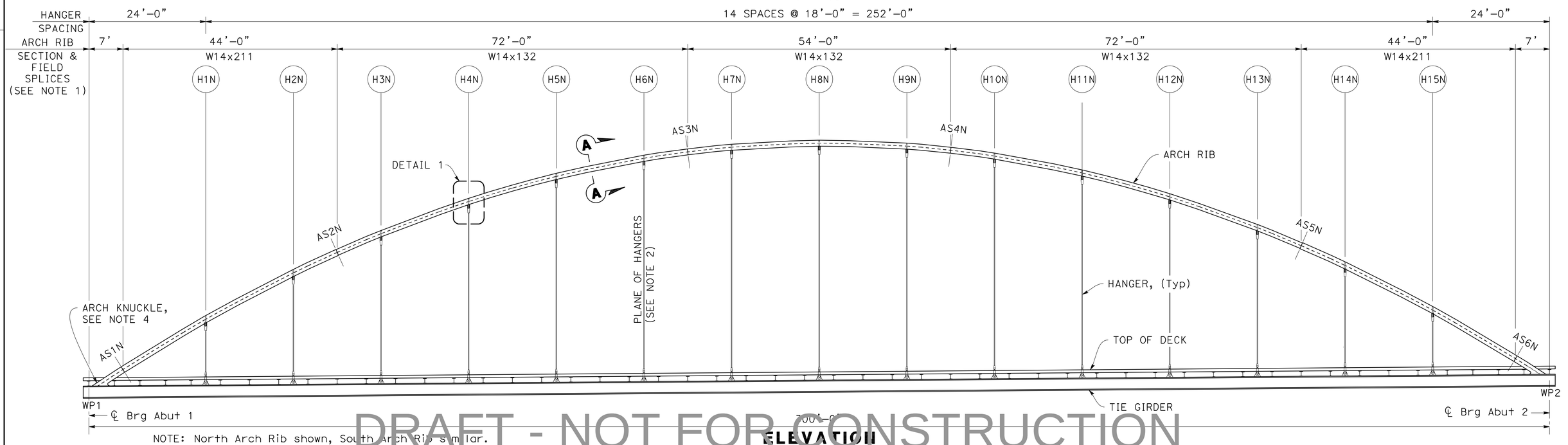

NOTE: North Arch Rib shown, South Arch Rib similar.

ELEVATION
1" = 10'

DRAFT - NOT FOR CONSTRUCTION

DESIGN OVERSIGHT		DESIGN	BY M. KLEYMANN	CHECKED X	PREPARED FOR THE STATE OF CALIFORNIA DEPARTMENT OF TRANSPORTATION
SIGN OFF DATE		DETAILS	BY J. VALENZUELA	CHECKED X	M. KLEYMANN, PROJECT ENGINEER
		QUANTITIES	BY X	CHECKED X	BRIDGE No. 36-XXXX; POST MILE X

APTOS CREEK PEDESTRIAN BRIDGE

ARCH PLAN AND ELEVATION

STRUCTURES DESIGN DETAIL SHEET (ENGLISH) (REVISION 8/16/2021)

DATE PLOTTED => 4/1/2025 TIME PLOTTED => 12:13 PM
FILE => 12_Aptos Creek PB_APE.dwg USERNAME => JVALENZUELA

ORIGINAL SCALE IN INCHES FOR REDUCED PLANS 0 1 2 3

PROJECT NUMBER & PHASE: 0518000116

COUNTY/ROUTE: SCR/1
CONTRACT No.: 05-0C734

DISREGARD PRINTS BEARING EARLIER REVISION DATES →

REVISION DATES

SHEET 12 OF 39

Dist	COUNTY	ROUTE	POST MILES TOTAL PROJECT	SHEET No.	TOTAL SHEETS
5	SCR	1	8.1/10.7	----	931

REGISTERED CIVIL ENGINEER DATE

PLANS APPROVAL DATE

REGISTERED PROFESSIONAL ENGINEER — MATTHEW KLEYMANN — No. 91100 — Exp. 3/31/26 — CIVIL — STATE OF CALIFORNIA

THE STATE OF CALIFORNIA OR ITS OFFICERS OR AGENTS SHALL NOT BE RESPONSIBLE FOR THE ACCURACY OR COMPLETENESS OF SCANNED COPIES OF THIS PLAN SHEET.

SCCRTC
1523 PACIFIC AVE
SANTA CRUZ, CA 95060

MARK THOMAS
701 UNIVERSITY AVE, STE 200
SACRAMENTO, CA 95825

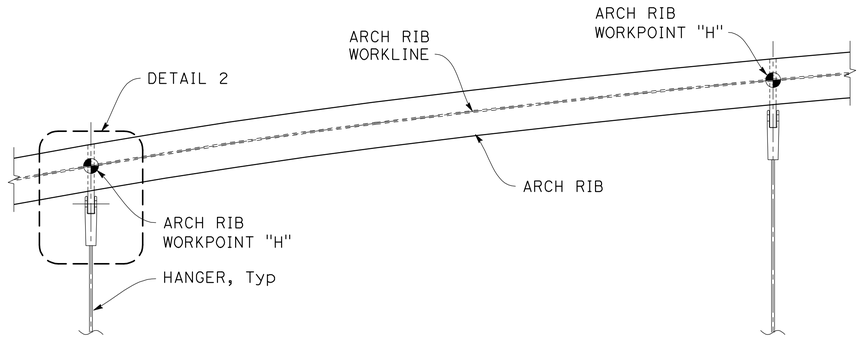

TYPICAL ELEVATION - ARCH RIB

1/2" = 1'-0"

NORTH ARCH RIB SHOWN, SOUTH ARCH RIB SIMILAR

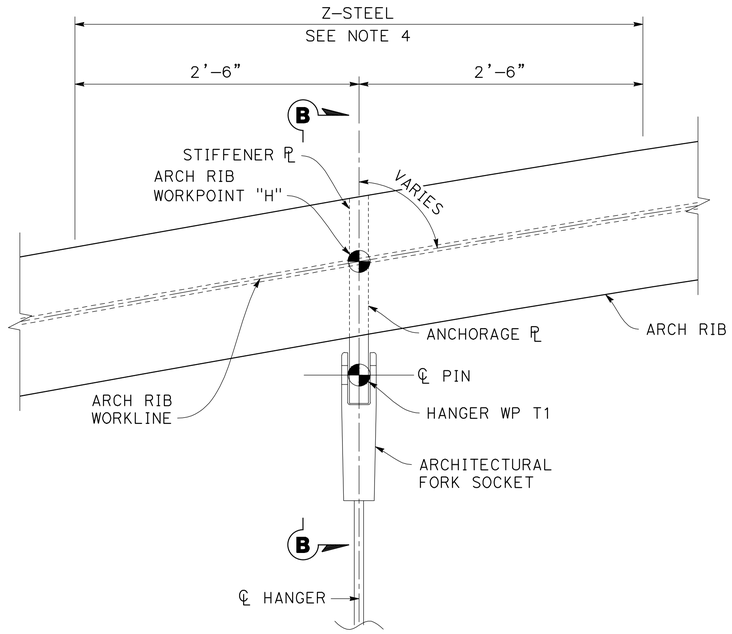

DETAIL 2

1 1/2" = 1'-0"

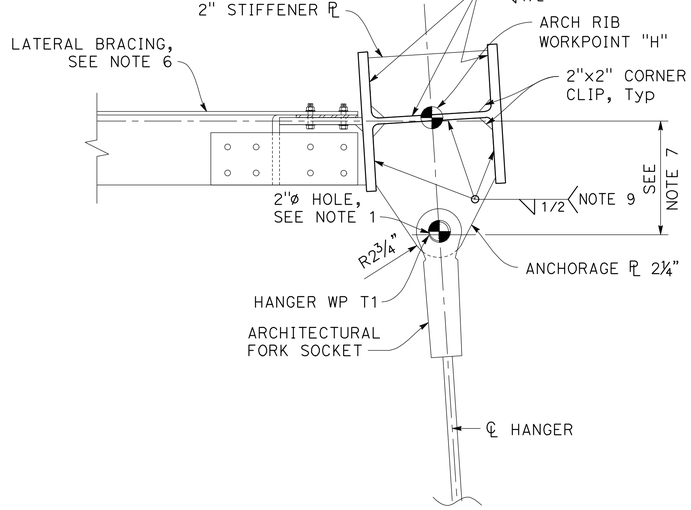

SECTION B-B

1 1/2" = 1'-0"

NOTES:

1. Anchorage plates and boss plates are detailed based on the dimensional requirements of WIRECO Structures 1"ø architectural adjustable fork sockets as shown on "HANGER GEOMETRY AND DETAILS" sheet. Prior to fabrication, contractor must receive confirmation from hanger system fabricator that dimensions of anchorage plates are appropriate for hanger product. Pin hole diameter must not be more than 0.03125 inches greater than the pin diameter. And the anchorage plate shall not be less than 1/16" less than the anchorage fork width, after galvanizing. If a different hanger manufacturer or product is selected, the contractor must verify fit up and capacity of hanger anchorages and make any adjustments necessary. Any changes must be submitted to the Engineer for review and approval.
2. Anchorage plate holes must be bored with a 125 micro-inch surface finish across the total thickness of the assembly.
3. Hanger WP T1 corresponds to center of pin/hole. Align along the chord defined by the H-B2 Workpoints on "HANGER GEOMETRY AND DETAILS" sheet. Angle of plane varies for each hanger
4. Arch Rib web and inside flange (towards ℄ bridge) must satisfy ASTM A770 through thickness tension testing for the area shown.
5. Anchorage plates and connection welds are designed for the minimum breaking load of the hanger.
6. For Lateral Bracing details, see "UPPER BRACING DETAILS No. 2" sheet.
7. For Hanger Workpoint locations, see "HANGER GEOMETRY AND DETAILS" sheet.
8. For additional arch rib details at lateral end brace, see "UPPER BRACING DETAILS No. 3 & 4" sheets.

DRAFT - NOT FOR CONSTRUCTION

DESIGN OVERSIGHT		DESIGN	BY M. KLEYMANN	CHECKED X	PREPARED FOR THE STATE OF CALIFORNIA DEPARTMENT OF TRANSPORTATION	M. KLEYMANN PROJECT ENGINEER	BRIDGE No. 36-XXXX
SIGN OFF DATE		DETAILS	BY J. VALENZUELA	CHECKED X			POST MILE X
		QUANTITIES	BY X	CHECKED X			

APTOS CREEK PEDESTRIAN BRIDGE

ARCH RIB DETAILS No. 1

STRUCTURES DESIGN DETAIL SHEET (ENGLISH) (REVISION 8/16/2021)

DATE PLOTTED => 4/1/2025 TIME PLOTTED => 12:15 PM
FILE => 13_Aptos Creek PB_RDT1.dwg USERNAME => JVALENZUELA

ORIGINAL SCALE IN INCHES FOR REDUCED PLANS 0 1 2 3

PROJECT NUMBER & PHASE:0518000116 COUNTY/ROUTE:SCR/1 CONTRACT No.:05-0C734

DISREGARD PRINTS BEARING EARLIER REVISION DATES

REVISION DATES				SHEET	OF
				13	39

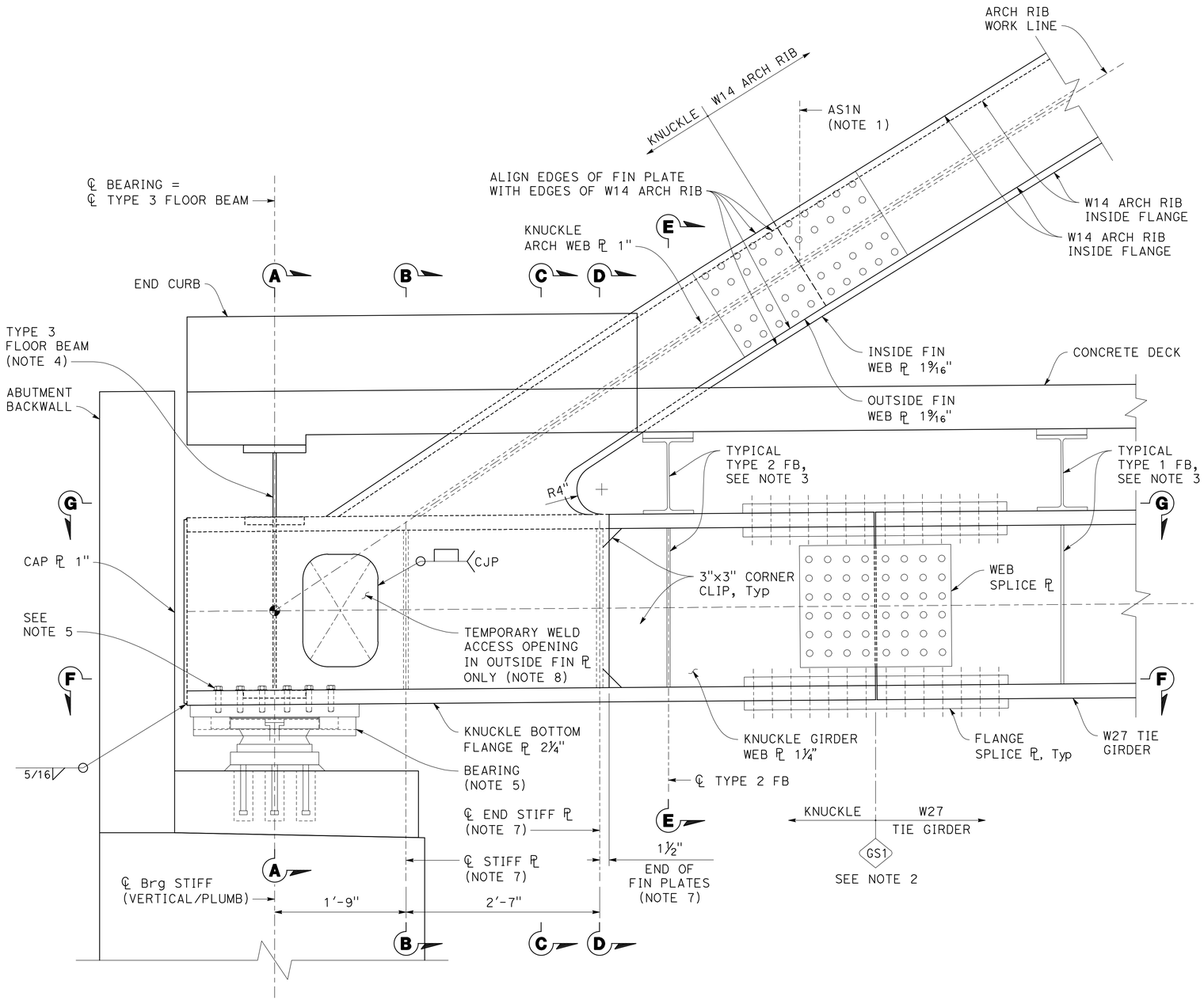

ARCH KNUCKLE - ELEVATION

1 1/4" = 1'-0"

NORTH KNUCKLE SHOWN, SOUTH KNUCKLE SIMILAR
RAILING NOT SHOWN FOR CLARITY

DRAFT - NOT FOR CONSTRUCTION

SUGGESTED KNUCKLE ASSEMBLY SEQUENCE:

1. Assemble knuckle bottom flange plate, inside fin plate, and outside fin plate.
2. Install bearing stiffener plate, stiffener plate B, and stiffener plate C. Weld bottoms and sides.
3. Install knuckle top flange. Weld top partial penetration welds from top/outside. Weld bottom fillet weld at Floor Beam Type 3 from end and using access opening.
4. Weld top of bearing stiffener plate, stiffener plate B, and stiffener plate C from ends.
5. Assemble and weld knuckle arch web plate.
6. Assemble and weld knuckle girder web plate.

Dist	COUNTY	ROUTE	POST MILES TOTAL PROJECT	SHEET No.	TOTAL SHEETS
5	SCR	1	8.1/10.7	----	931

REGISTERED CIVIL ENGINEER DATE

PLANS APPROVAL DATE

REGISTERED PROFESSIONAL ENGINEER — MATTHEW KLEYMANN — No. 91100 — Exp. 3/31/26 — CIVIL — STATE OF CALIFORNIA

THE STATE OF CALIFORNIA OR ITS OFFICERS OR AGENTS SHALL NOT BE RESPONSIBLE FOR THE ACCURACY OR COMPLETENESS OF SCANNED COPIES OF THIS PLAN SHEET.

SCCRTC
1523 PACIFIC AVE
SANTA CRUZ, CA 95060

MARK THOMAS
701 UNIVERSITY AVE, STE 200
SACRAMENTO, CA 95825

LEGEND:

GS1 — Tie Girder Splice Number

AS1N — Arch Rib Field Splice Number

NOTES:

1. For location of arch rib field splice AS1N and AS6N, see "ARCH PLAN AND ELEVATION" sheet. For details of arch rib field splice details, see "ARCH RIB DETAILS No. 5" sheet.
2. For location of tie girder field splice GS1 and GS6, see "DECK FRAMING PLAN" sheet. For details of tie girder field splice details, see "TIE GIRDER DETAILS No. 2" sheet.
3. For typical Type 1 and Type 2 Floor Beam and connection details, see "FLOOR BEAM TYPE 1 AND TYPE 2 FLOOR DETAILS" sheet.
4. For Type 3 Floor Beam details see "FLOOR BEAM TYPE 3 DETAILS" sheet.
5. For bearing details including bolted connection between knuckle bottom flange and sole plate, see "BEARING DETAILS" sheet.
6. Fin plates within 1"-0" of centerline bearing and bearing stiffener must be finished to bear with knuckle bottom flange plate. Finish to bear surfaces must meet the ANSI surface roughness requirements as defined in ANSI B46.1, Surface Roughness, Waviness and Lay, Part I: ANSI 500.
7. Orient perpendicular to knuckle bottom flange.
8. Temporary opening is provided for weld access to bottom of knuckle top flange. Prior to shipping arch rib to site, opening must be filled back in with a plate matching the thickness of the fin plate using a CJP (with permanent backing bar) all around. Access opening may be eliminated by fabricator if welds can be completed without it.
9. Fin plates, knuckle top flange plate and end stiffener plate must satisfy ASTM A770 through thickness tension testing.

DESIGN OVERSIGHT

SIGN OFF DATE

	BY	CHECKED
DESIGN	M. KLEYMANN	X
DETAILS	J. VALENZUELA	X
QUANTITIES	X	X

PREPARED FOR THE
STATE OF CALIFORNIA
DEPARTMENT OF TRANSPORTATION

M. KLEYMANN
PROJECT ENGINEER

BRIDGE No. 36-XXXX
POST MILE X

APTOS CREEK PEDESTRIAN BRIDGE

ARCH RIB DETAILS No. 2

STRUCTURES DESIGN DETAIL SHEET
(ENGLISH) (REVISION 8/16/2021)

DATE PLOTTED => 4/1/2025 TIME PLOTTED => 12:16 PM
FILE => 14_Aptos Creek PB_RDT2.dwg USERNAME => JVALENZUELA

ORIGINAL SCALE IN INCHES FOR REDUCED PLANS 0 1 2 3

PROJECT NUMBER & PHASE:0518000116
COUNTY/ROUTE:SCR/1
CONTRACT No.:05-0C734

DISREGARD PRINTS BEARING EARLIER REVISION DATES →

REVISION DATES				SHEET	OF
				14	39

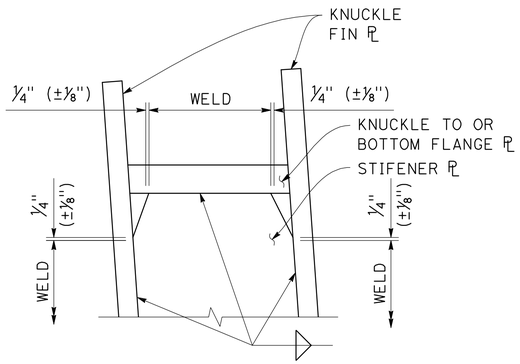

TYPICAL WELDING DETAIL
AT CORNERS OF CONNECTED PARTS

DETAIL 1

2" = 1'-0"

NOTES:

For typical Knuckle notes, see "ARCH RIB DETAILS No. 2" sheet.

Dist	COUNTY	ROUTE	POST MILES TOTAL PROJECT	SHEET No.	TOTAL SHEETS
5	SCR	1	8.1/10.7	----	931

REGISTERED CIVIL ENGINEER DATE

PLANS APPROVAL DATE

REGISTERED PROFESSIONAL ENGINEER — MATTHEW KLEYMANN — No. 91100 — Exp. 3/31/26 — CIVIL — STATE OF CALIFORNIA

THE STATE OF CALIFORNIA OR ITS OFFICERS OR AGENTS SHALL NOT BE RESPONSIBLE FOR THE ACCURACY OR COMPLETENESS OF SCANNED COPIES OF THIS PLAN SHEET.

SCCRTC
1523 PACIFIC AVE
SANTA CRUZ, CA 95060

MARK THOMAS
701 UNIVERSITY AVE, STE 200
SACRAMENTO, CA 95825

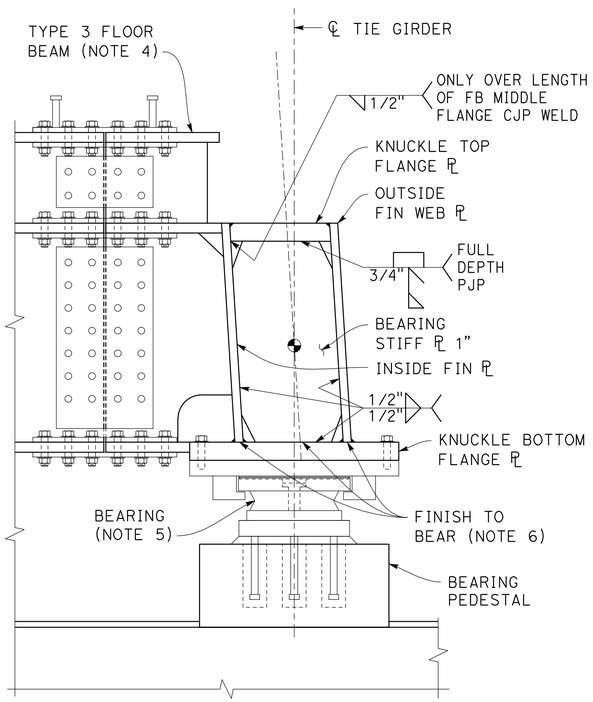

SECTION A-A

1 1/4" = 1'-0"

FOR DETAILS NOT SHOWN,
SEE SECTION C-C

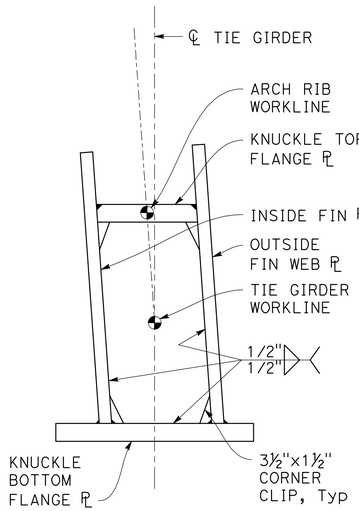

SECTION B-B

1 1/4" = 1'-0"

FOR DETAILS NOT SHOWN,
SEE SECTION C-C

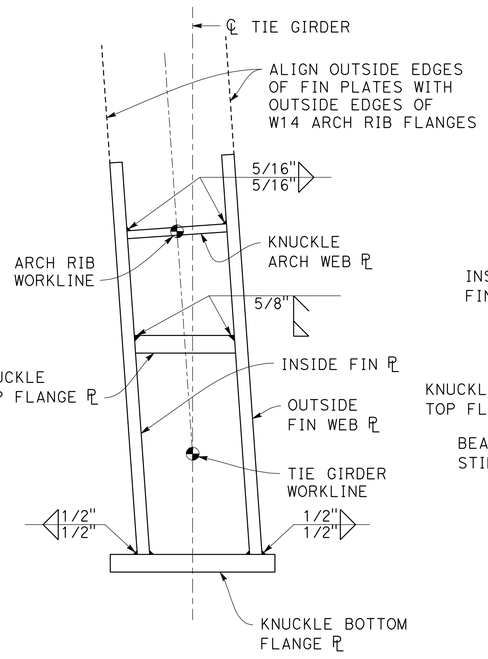

SECTION C-C

1 1/4" = 1'-0"

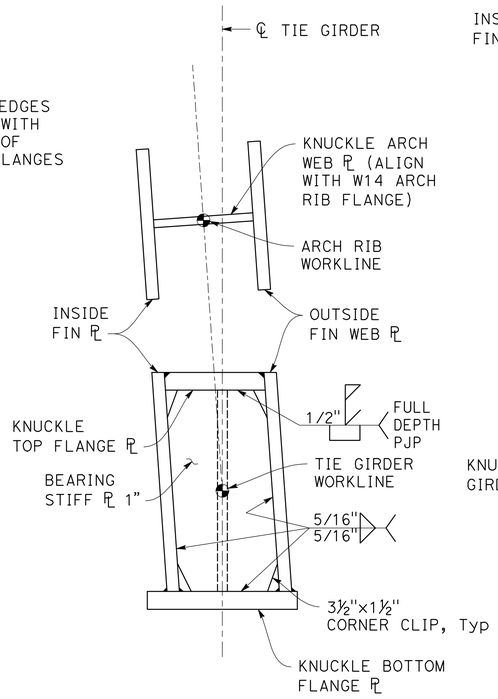

SECTION D-D

1 1/4" = 1'-0"

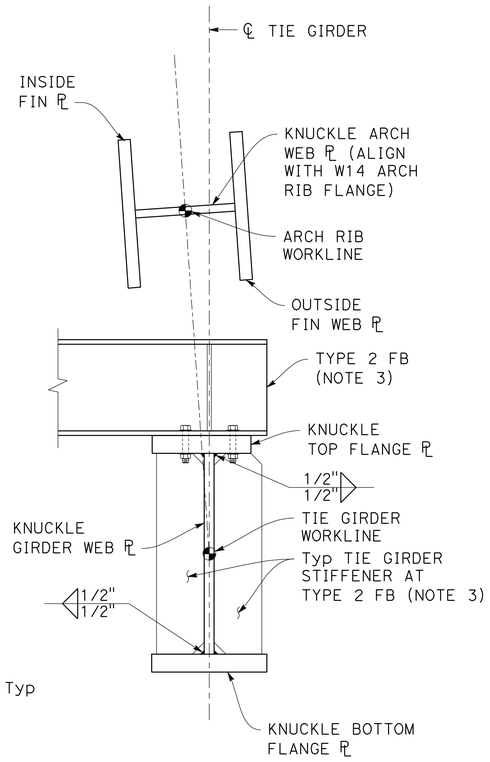

SECTION E-E

1 1/4" = 1'-0"

DRAFT - NOT FOR CONSTRUCTION

DESIGN OVERSIGHT

SIGN OFF DATE

	BY	CHECKED
DESIGN	M. KLEYMANN	X
DETAILS	J. VALENZUELA	X
QUANTITIES	X	X

PREPARED FOR THE
STATE OF CALIFORNIA
DEPARTMENT OF TRANSPORTATION

M. KLEYMANN
PROJECT ENGINEER

BRIDGE No. 36-XXXX
POST MILE X

APTOS CREEK PEDESTRIAN BRIDGE

ARCH RIB DETAILS No. 3

STRUCTURES DESIGN DETAIL SHEET (ENGLISH) (REVISION 8/16/2021)

DATE PLOTTED => 4/1/2025 TIME PLOTTED => 12:17 PM
FILE => 15_Aptos Creek PB_RDT3.dwg USERNAME => JVALENZUELA

ORIGINAL SCALE IN INCHES FOR REDUCED PLANS 0 1 2 3

PROJECT NUMBER & PHASE:0518000116
COUNTY/ROUTE: SCR/1
CONTRACT No.: 05-0C734

DISREGARD PRINTS BEARING EARLIER REVISION DATES →

REVISION DATES				SHEET	OF
				15	39

Dist	COUNTY	ROUTE	POST MILES TOTAL PROJECT	SHEET No.	TOTAL SHEETS
5	SCR	1	8.1/10.7	----	931

REGISTERED CIVIL ENGINEER DATE

PLANS APPROVAL DATE

REGISTERED PROFESSIONAL ENGINEER — MATTHEW KLEYMANN — No. 91100 — Exp. 3/31/26 — CIVIL — STATE OF CALIFORNIA

THE STATE OF CALIFORNIA OR ITS OFFICERS OR AGENTS SHALL NOT BE RESPONSIBLE FOR THE ACCURACY OR COMPLETENESS OF SCANNED COPIES OF THIS PLAN SHEET.

SCCRTC
1523 PACIFIC AVE
SANTA CRUZ, CA 95060

MARK THOMAS
701 UNIVERSITY AVE, STE 200
SACRAMENTO, CA 95825

NOTES:

For typical Knuckle notes, see "ARCH RIB DETAILS No. 2" sheet.

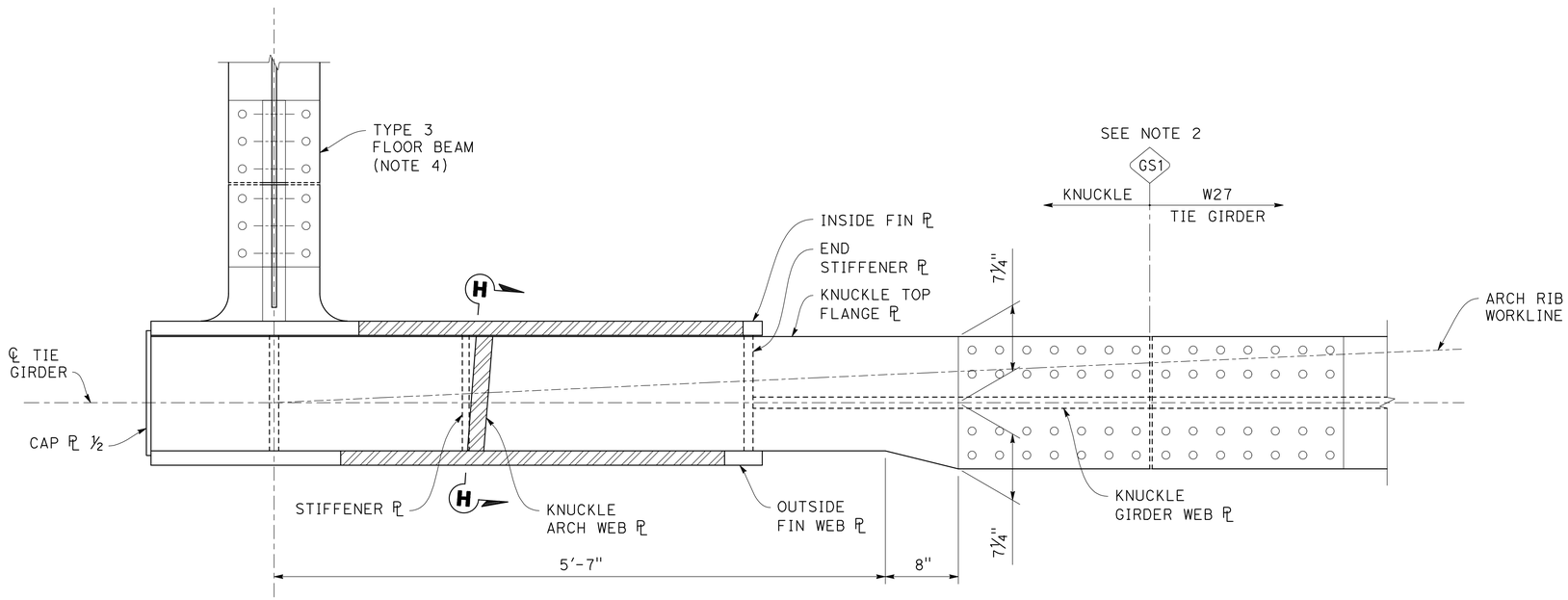

SECTION G-G

1 1/2" = 1'-0"

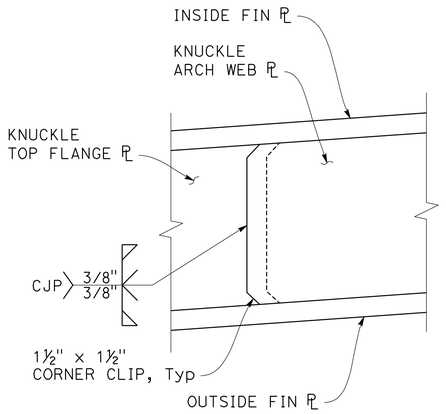

VIEW H-H

NO SCALE

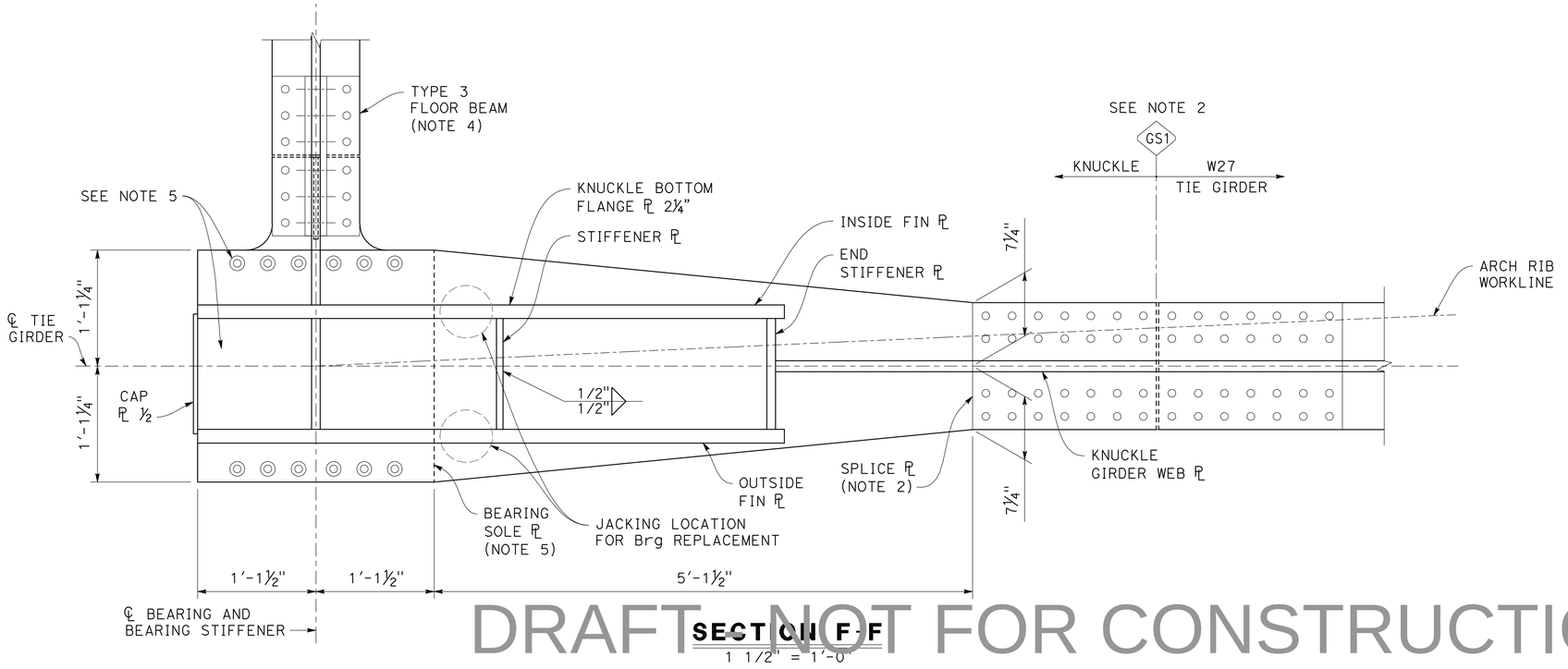

SECTION F-F

1 1/2" = 1'-0"

DRAFT - NOT FOR CONSTRUCTION

DESIGN OVERSIGHT		DESIGN	BY M. KLEYMANN	CHECKED X	PREPARED FOR THE STATE OF CALIFORNIA DEPARTMENT OF TRANSPORTATION
SIGN OFF DATE		DETAILS	BY J. VALENZUELA	CHECKED X	M. KLEYMANN, PROJECT ENGINEER
		QUANTITIES	BY X	CHECKED X	BRIDGE No. 36-XXXX; POST MILE X

APTOS CREEK PEDESTRIAN BRIDGE

ARCH RIB DETAILS No. 4

STRUCTURES DESIGN DETAIL SHEET (ENGLISH) (REVISION 8/16/2021)

DATE PLOTTED => 4/1/2025 TIME PLOTTED => 12:19 PM
FILE => 16_Aptos Creek PB_RDT4.dwg USERNAME => JVALENZUELA

ORIGINAL SCALE IN INCHES FOR REDUCED PLANS 0 1 2 3

PROJECT NUMBER & PHASE: 0518000116 COUNTY/ROUTE: SCR/1 CONTRACT No.: 05-0C734

DISREGARD PRINTS BEARING EARLIER REVISION DATES

REVISION DATES				SHEET	OF
				16	39

Dist	COUNTY	ROUTE	POST MILES TOTAL PROJECT	SHEET No.	TOTAL SHEETS
5	SCR	1	8.1/10.7	812	931

REGISTERED CIVIL ENGINEER DATE

PLANS APPROVAL DATE

REGISTERED PROFESSIONAL ENGINEER — MATTHEW KLEYMANN — No. 91100 — Exp. 3/31/26 — CIVIL — STATE OF CALIFORNIA

THE STATE OF CALIFORNIA OR ITS OFFICERS OR AGENTS SHALL NOT BE RESPONSIBLE FOR THE ACCURACY OR COMPLETENESS OF SCANNED COPIES OF THIS PLAN SHEET.

SCCRTC
1523 PACIFIC AVE
SANTA CRUZ, CA 95060

MARK THOMAS
701 UNIVERSITY AVE, STE 200
SACRAMENTO, CA 95825

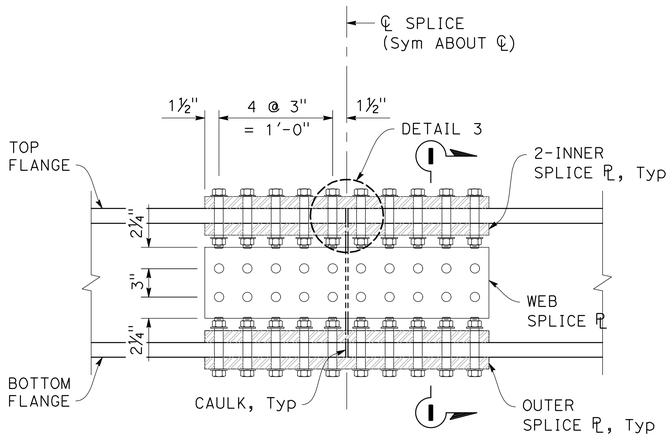

SIDE VIEW

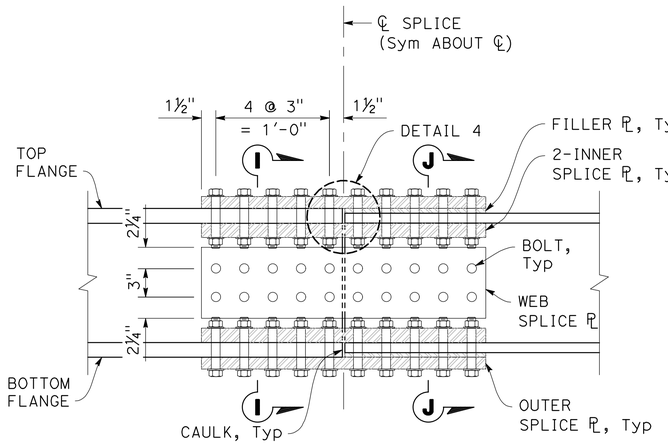

SIDE VIEW

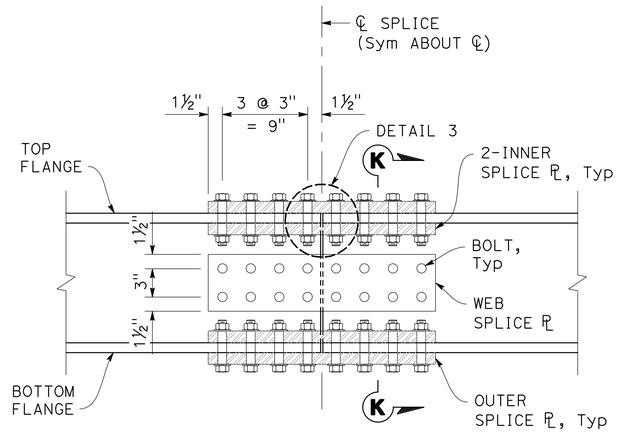

SIDE VIEW

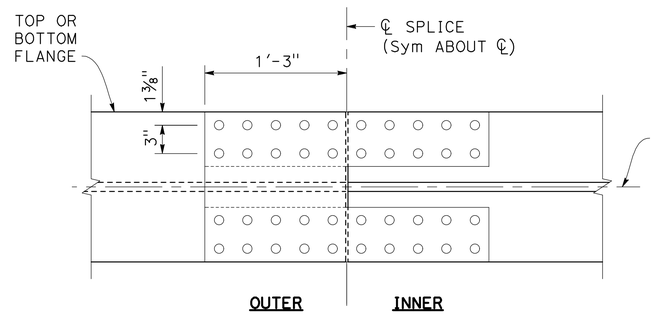

FLANGE SPLICE

AS1 AND AS6 SPLICE DETAILS

1" = 1'-0"

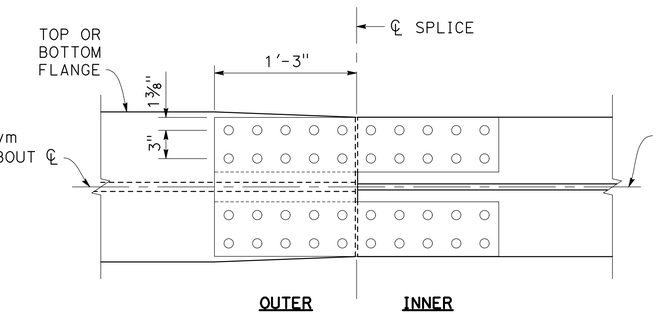

FLANGE SPLICE

AS2 AND AS5 SPLICE DETAILS

1" = 1'-0"

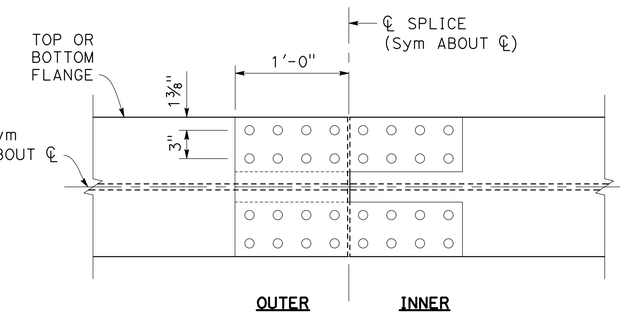

FLANGE SPLICE

AS3 AND AS4 SPLICE DETAILS

1" = 1'-0"

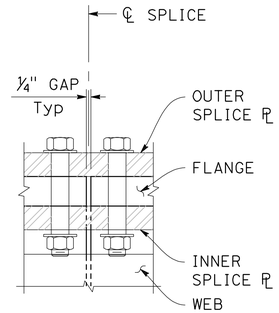

DETAIL 3

3" = 1'-0"

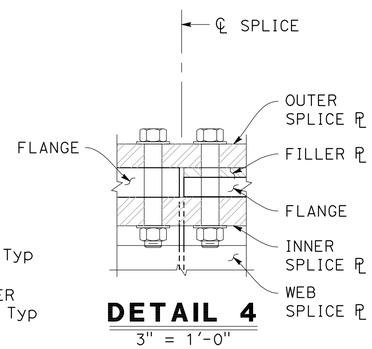

DETAIL 4

3" = 1'-0"

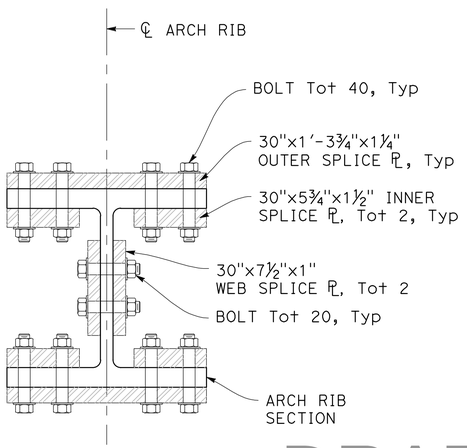

SECTION I-I

2" = 1'-0"

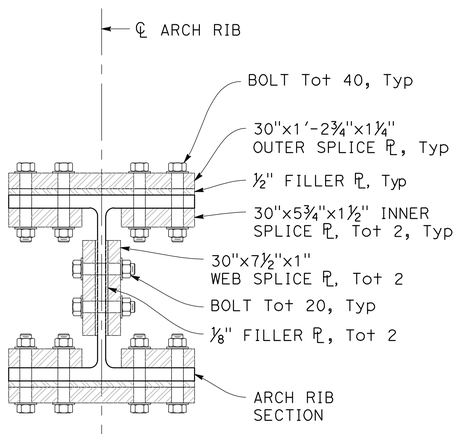

SECTION J-J

2" = 1'-0"

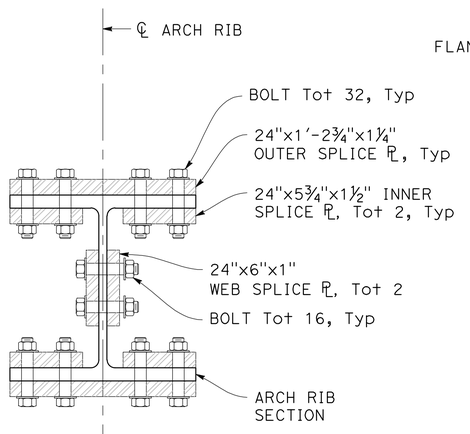

SECTION K-K

2" = 1'-0"

DRAFT - NOT FOR CONSTRUCTION

DESIGN OVERSIGHT

SIGN OFF DATE

	BY	CHECKED
DESIGN	M. KLEYMANN	X
DETAILS	J. VALENZUELA	X
QUANTITIES	X	X

PREPARED FOR THE STATE OF CALIFORNIA DEPARTMENT OF TRANSPORTATION

M. KLEYMANN
PROJECT ENGINEER

BRIDGE No. 36-XXXX
POST MILE X

APTOS CREEK PEDESTRIAN BRIDGE

ARCH RIB DETAILS No. 5

STRUCTURES DESIGN DETAIL SHEET (ENGLISH) (REVISION 8/16/2021)

DATE PLOTTED => 5/7/2025 TIME PLOTTED => 4:56 PM
FILE => 17_Aptos Creek PB_RDT5.dwg USERNAME => JVALENZUELA

ORIGINAL SCALE IN INCHES FOR REDUCED PLANS 0 1 2 3

PROJECT NUMBER & PHASE:0518000116
COUNTY/ROUTE:SCR/1
CONTRACT No.:05-0C734

DISREGARD PRINTS BEARING EARLIER REVISION DATES →

REVISION DATES

SHEET 17 OF 39

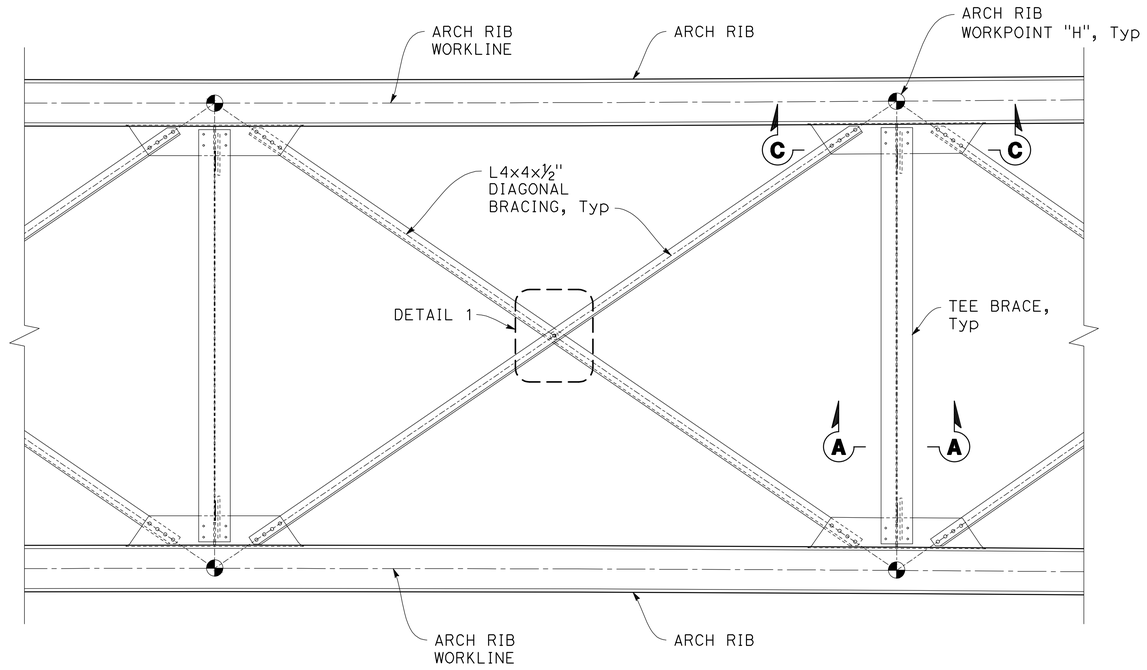

PLAN - TYPICAL UPPER BRACING BAY

1/2" = 1'-0"

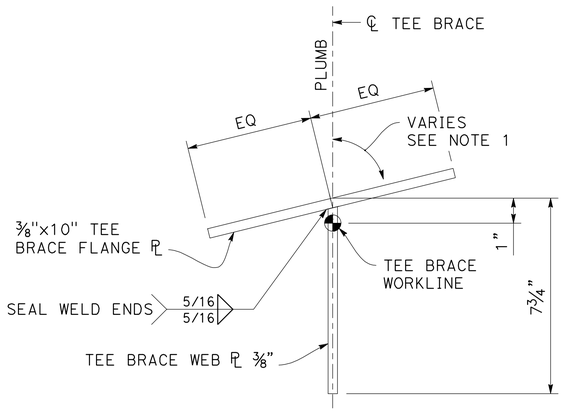

SECTION A-A

NO SCALE

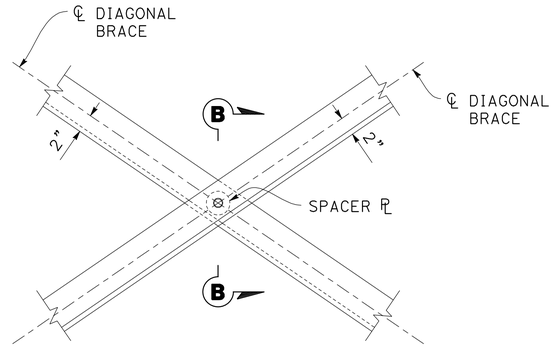

DETAIL 1

1 1/2" = 1'-0"

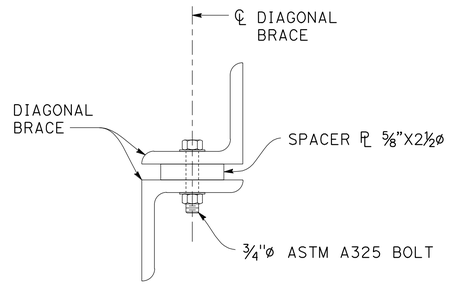

SECTION B-B

NO SCALE

DRAFT - NOT FOR CONSTRUCTION

Dist	COUNTY	ROUTE	POST MILES TOTAL PROJECT	SHEET No.	TOTAL SHEETS
5	SCR	1	8.1/10.7	----	931

REGISTERED CIVIL ENGINEER DATE

PLANS APPROVAL DATE

REGISTERED PROFESSIONAL ENGINEER — MATTHEW KLEYMANN — No. 91100 — Exp. 3/31/26 — CIVIL — STATE OF CALIFORNIA

THE STATE OF CALIFORNIA OR ITS OFFICERS OR AGENTS SHALL NOT BE RESPONSIBLE FOR THE ACCURACY OR COMPLETENESS OF SCANNED COPIES OF THIS PLAN SHEET.

SCCRTC
1523 PACIFIC AVE
SANTA CRUZ, CA 95060

MARK THOMAS
701 UNIVERSITY AVE, STE 200
SACRAMENTO, CA 95825

NOTES:

1. Tee brace flange is normal to the bisector of the angle formed by the diagonal braces of either side of the tee brace. See "DETAIL 2" on "UPPER BRACING DETAILS No. 2" sheet.
2. For SECTION C-C, see "UPPER BRACING DETAILS No. 2" sheet.

DESIGN OVERSIGHT

SIGN OFF DATE

	BY	CHECKED
DESIGN	M. KLEYMANN	X
DETAILS	J. VALENZUELA	X
QUANTITIES	X	X

PREPARED FOR THE STATE OF CALIFORNIA DEPARTMENT OF TRANSPORTATION

M. KLEYMANN
PROJECT ENGINEER

BRIDGE No. 36-XXXX
POST MILE X

APTOS CREEK PEDESTRIAN BRIDGE

UPPER BRACING DETAILS No. 1

STRUCTURES DESIGN DETAIL SHEET (ENGLISH) (REVISION 8/16/2021)

DATE PLOTTED => 4/1/2025 TIME PLOTTED => 12:20 PM
FILE => 18_Aptos Creek PB_BDT1.dwg USERNAME => JVALENZUELA

ORIGINAL SCALE IN INCHES FOR REDUCED PLANS 0 1 2 3

PROJECT NUMBER & PHASE: 0518000116

COUNTY/ROUTE: SCR/1
CONTRACT No.: 05-0C734

DISREGARD PRINTS BEARING EARLIER REVISION DATES →

REVISION DATES				SHEET	OF
				18	39

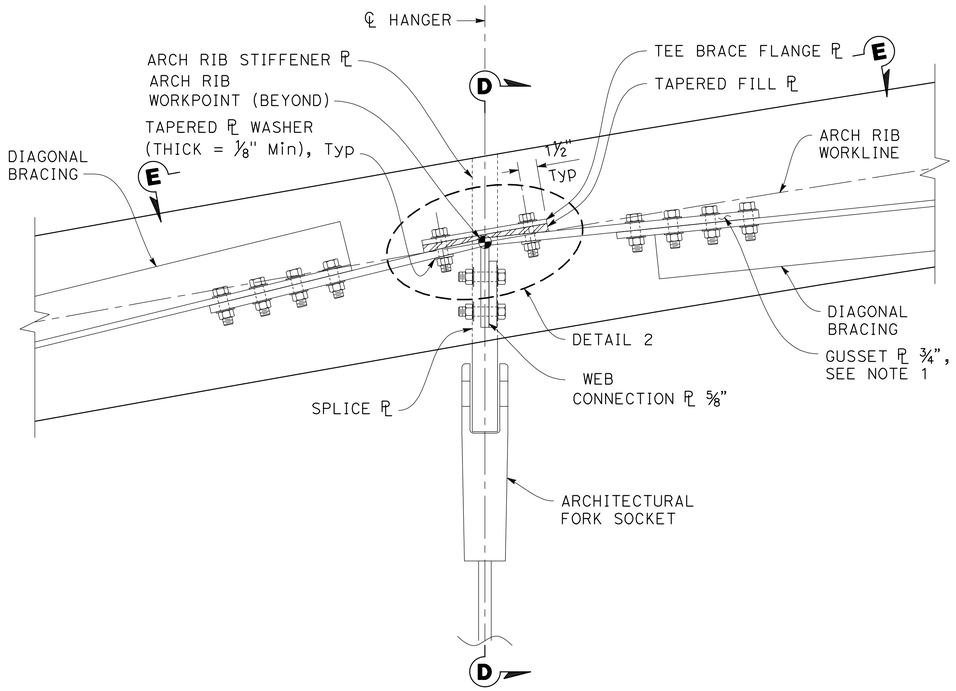

(TYPICAL INSIDE ELEVATION UPPER BRACING CONNECTION)

SECTION C-C

2" = 1'-0"

SOUTH ARCH RIB SHOWN, NORTH ARCH RIB SIMILAR

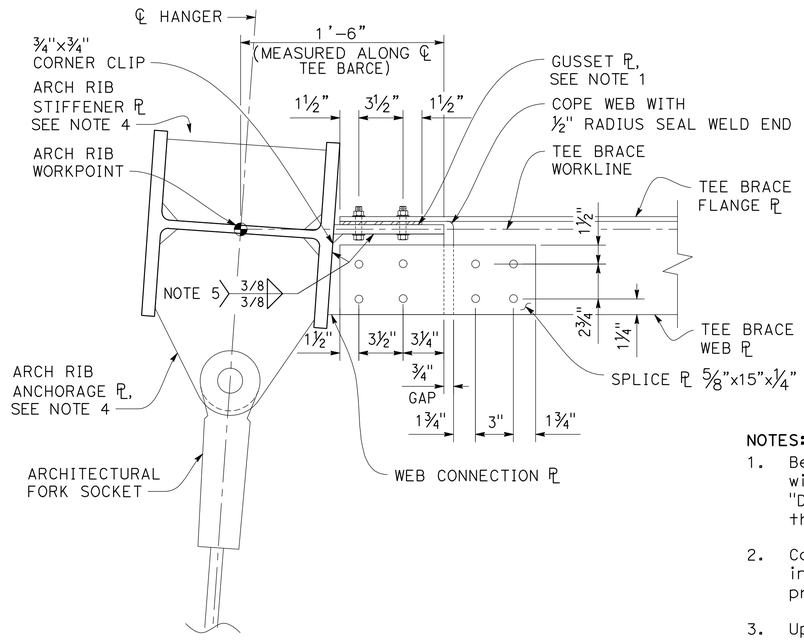

SECTION D-D

2" = 1'-0"

Dist	COUNTY	ROUTE	POST MILES TOTAL PROJECT	SHEET No.	TOTAL SHEETS
5	SCR	1	8.1/10.7	----	931

REGISTERED CIVIL ENGINEER DATE

PLANS APPROVAL DATE

REGISTERED PROFESSIONAL ENGINEER — MATTHEW KLEYMANN — No. 91100 — Exp. 3/31/26 — CIVIL — STATE OF CALIFORNIA

THE STATE OF CALIFORNIA OR ITS OFFICERS OR AGENTS SHALL NOT BE RESPONSIBLE FOR THE ACCURACY OR COMPLETENESS OF SCANNED COPIES OF THIS PLAN SHEET.

SCCRTC
1523 PACIFIC AVE
SANTA CRUZ, CA 95060

MARK THOMAS
701 UNIVERSITY AVE, STE 200
SACRAMENTO, CA 95825

NOTES:

1. Bend gusset plate at bend line to align with angles of diagonal braces as shown on "DETAIL 2". Minimum bend radius is 5 x thickness of the plate.
2. Contractor to develop sequence of bolt installation and tightening and show proposed plan on shop drawings.
3. Upper bracing details shown on this sheet represent a typical brace location and design intent. Gusset geometry and fill plate geometry vary for each connection location and fabricator must detail each connection using a 3D model and the design parameters shown here.
4. For details of Arch Rib Stiffener Plate and Arch Rib Anchorage Plate, see "ARCH RIB DETAILS No. 1" sheet.

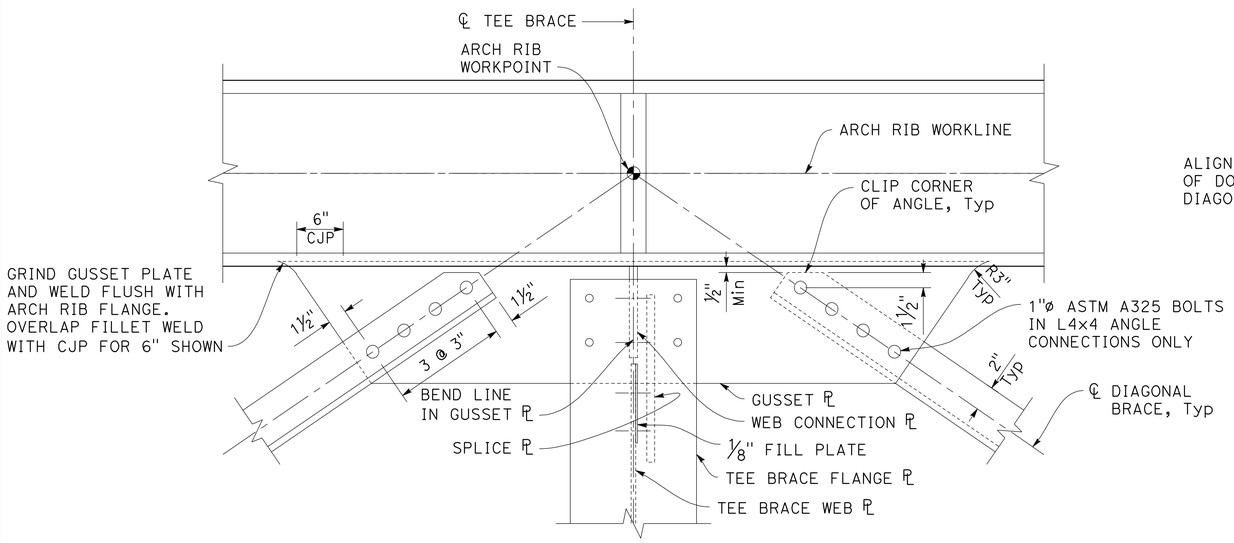

(IN PLANE OF GUSSET PLATE)

DEVELOPED VIEW E-E

2" = 1'-0"

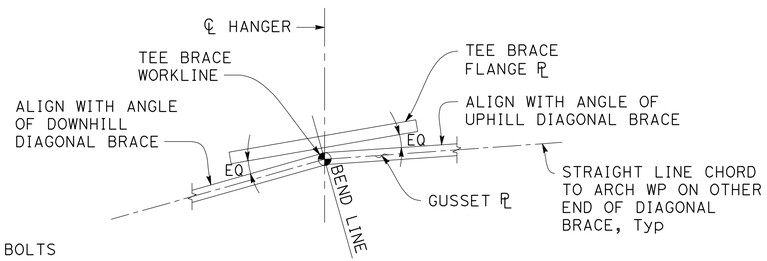

GUSSET PLATE SCHEMATIC

DETAIL 2

NO SCALE

DRAFT - NOT FOR CONSTRUCTION

DESIGN OVERSIGHT	DESIGN	BY M. KLEYMANN	CHECKED X	PREPARED FOR THE STATE OF CALIFORNIA DEPARTMENT OF TRANSPORTATION	M. KLEYMANN PROJECT ENGINEER
SIGN OFF DATE	DETAILS	BY J. VALENZUELA	CHECKED X		BRIDGE No. 36-XXXX
	QUANTITIES	BY X	CHECKED X		POST MILE X

APTOS CREEK PEDESTRIAN BRIDGE

UPPER BRACING DETAILS No. 3

STRUCTURES DESIGN DETAIL SHEET (ENGLISH) (REVISION 8/16/2021)

DATE PLOTTED => 4/1/2025 TIME PLOTTED => 12:21 PM
FILE => 19_Aptos Creek PB_BDT2.dwg USERNAME => JVALENZUELA

ORIGINAL SCALE IN INCHES FOR REDUCED PLANS 0 1 2 3

PROJECT NUMBER & PHASE:0518000116 COUNTY/ROUTE:SCR/1 CONTRACT No.:05-0C734

DISREGARD PRINTS BEARING EARLIER REVISION DATES →

REVISION DATES | SHEET 19 | OF 39

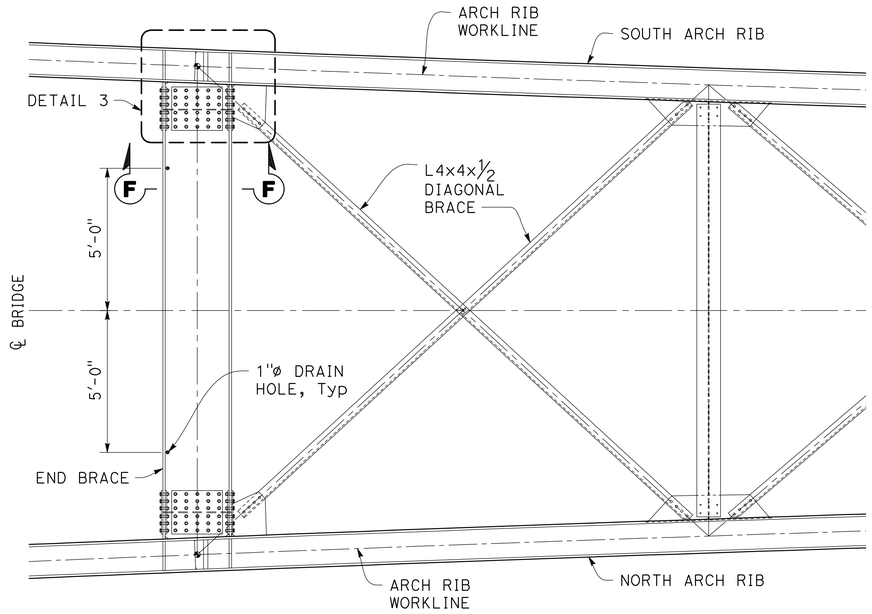

DEVELOPED PLAN VIEW OF UPPER BRACING END BRACE
(VIEW IN THE PLAN OF BRACING)

3/8" = 1'-0"

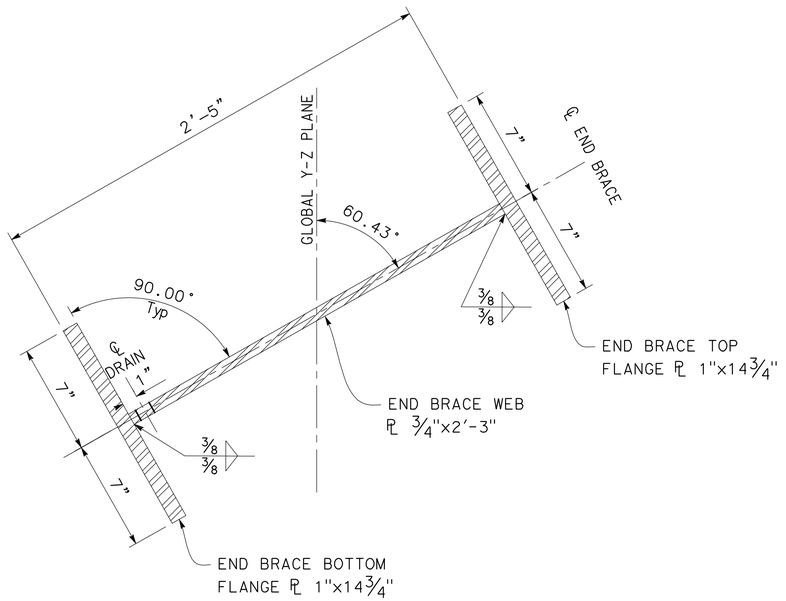

SECTION F-F

2 1/2" = 1'-0"

DRAFT - NOT FOR CONSTRUCTION

Dist	COUNTY	ROUTE	POST MILES TOTAL PROJECT	SHEET No.	TOTAL SHEETS
5	SCR	1	8.1/10.7	----	931

REGISTERED CIVIL ENGINEER DATE

PLANS APPROVAL DATE

REGISTERED PROFESSIONAL ENGINEER — MATTHEW KLEYMANN — No. 91100 — Exp. 3/31/26 — CIVIL — STATE OF CALIFORNIA

THE STATE OF CALIFORNIA OR ITS OFFICERS OR AGENTS SHALL NOT BE RESPONSIBLE FOR THE ACCURACY OR COMPLETENESS OF SCANNED COPIES OF THIS PLAN SHEET.

SCCRTC
1523 PACIFIC AVE
SANTA CRUZ, CA 95060

MARK THOMAS
701 UNIVERSITY AVE, STE 200
SACRAMENTO, CA 95825

NOTES:

1. For Detail 3, see "UUPER BRACING DETAILS No. 4" sheet.

DESIGN OVERSIGHT

SIGN OFF DATE

	BY	CHECKED
DESIGN	M. KLEYMANN	X
DETAILS	J. VALENZUELA	X
QUANTITIES	X	X

PREPARED FOR THE STATE OF CALIFORNIA DEPARTMENT OF TRANSPORTATION

M. KLEYMANN
PROJECT ENGINEER

BRIDGE No. 36-XXXX
POST MILE X

APTOS CREEK PEDESTRIAN BRIDGE
UPPER BRACING DETAILS No. 3

STRUCTURES DESIGN DETAIL SHEET (ENGLISH) (REVISION 8/16/2021)

DATE PLOTTED => 4/1/2025 TIME PLOTTED => 12:21 PM
FILE => 20_Aptos Creek PB_BDT3.dwg USERNAME => JVALENZUELA

ORIGINAL SCALE IN INCHES FOR REDUCED PLANS 0 1 2 3

PROJECT NUMBER & PHASE:0518000116
COUNTY/ROUTE: SCR/1
CONTRACT No.: 05-0C734

DISREGARD PRINTS BEARING EARLIER REVISION DATES

REVISION DATES					SHEET	OF
					20	39

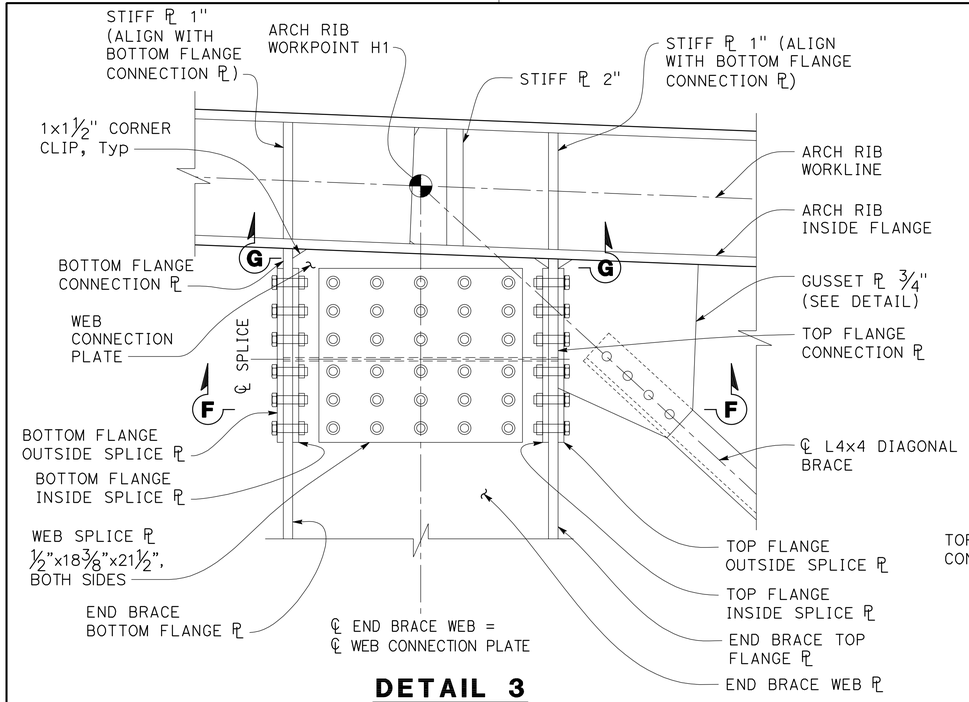

DETAIL 3
(IN THE PLANE OF THE BRACING)
1 1/2" = 1'-0"

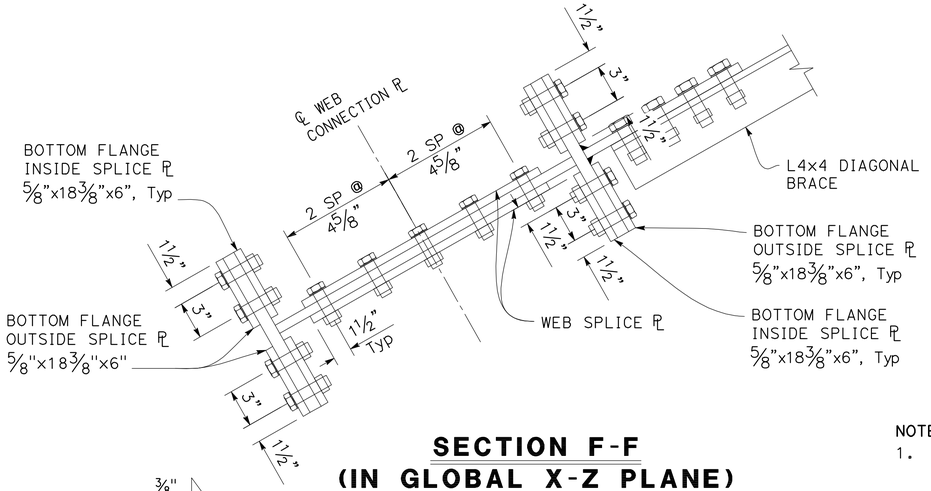

SECTION F-F
(IN GLOBAL X-Z PLANE)
2" = 1'-0"

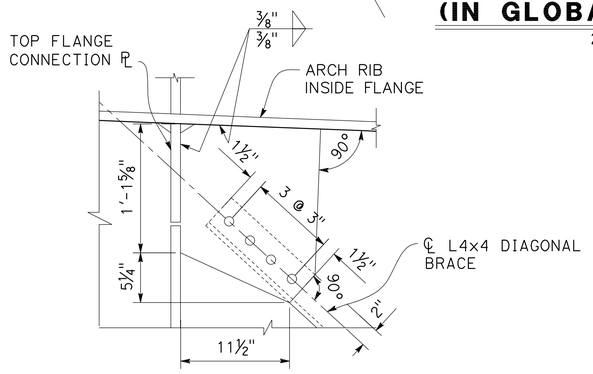

GUSSET PLATE DETAIL
1 1/2" = 1'-0"

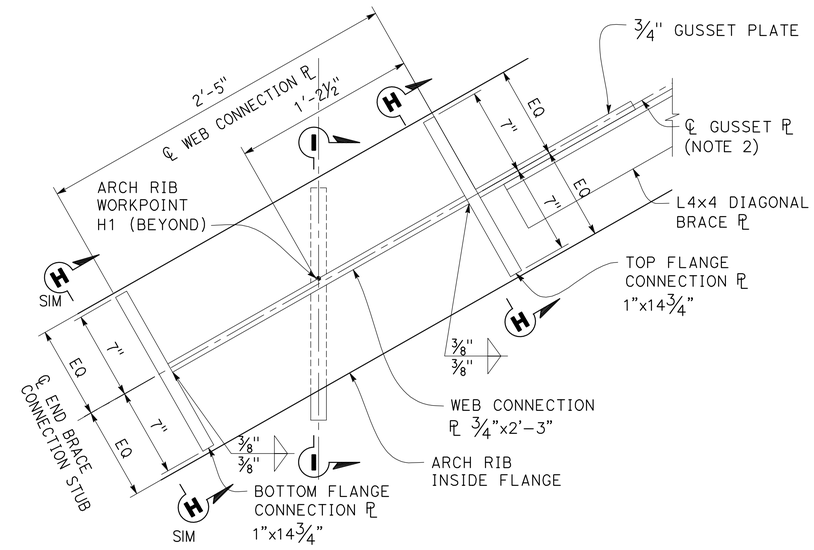

SECTION G-G
(IN GLOBAL X-Z PLANE)
2" = 1'-0"

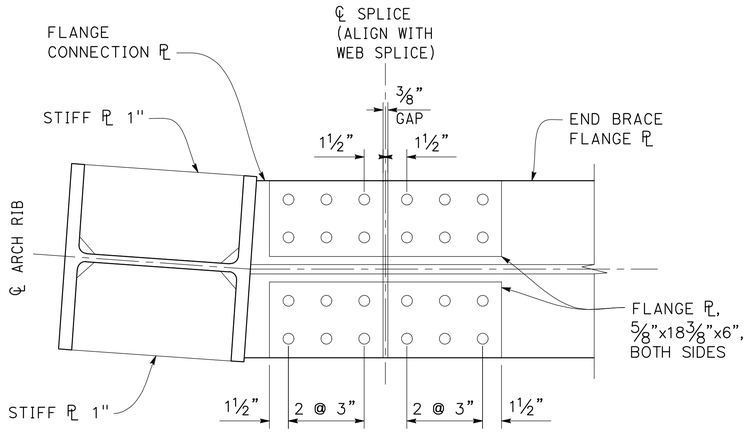

SECTION H-H
2" = 1'-0"

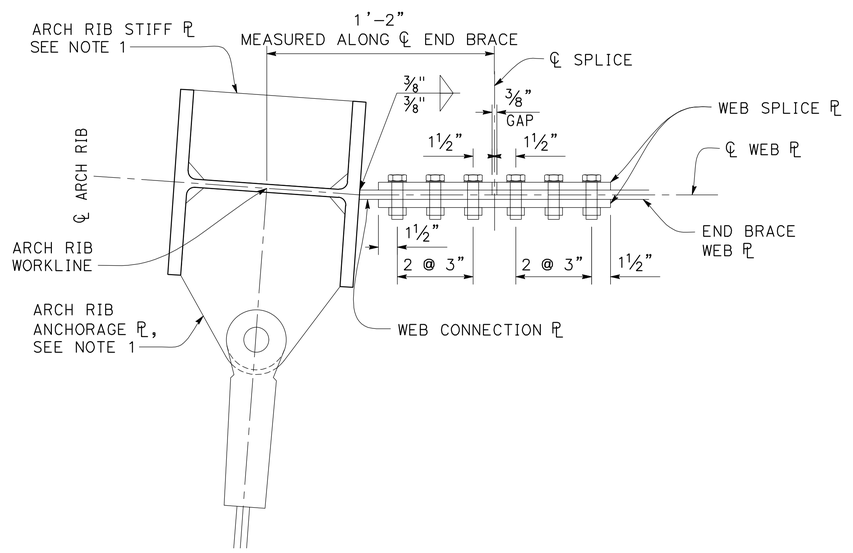

SECTION I-I
2" = 1'-0"

Dist	COUNTY	ROUTE	POST MILES TOTAL PROJECT	SHEET No.	TOTAL SHEETS
5	SCR	1	8.1/10.7	----	931

REGISTERED CIVIL ENGINEER DATE

PLANS APPROVAL DATE

REGISTERED PROFESSIONAL ENGINEER — MATTHEW KLEYMANN — No. 91100 — Exp. 3/31/26 — CIVIL — STATE OF CALIFORNIA

THE STATE OF CALIFORNIA OR ITS OFFICERS OR AGENTS SHALL NOT BE RESPONSIBLE FOR THE ACCURACY OR COMPLETENESS OF SCANNED COPIES OF THIS PLAN SHEET.

SCCRTC
1523 PACIFIC AVE
SANTA CRUZ, CA 95060

MARK THOMAS
701 UNIVERSITY AVE, STE 200
SACRAMENTO, CA 95825

NOTES:

1. For details of Arch Rib Stiffener Plate and Arch Rib Anchorage Plate, see "ARCH RIB DETAILS No. 1" sheet.
2. Align centerline of Gusset Plate with straight line chord between Arch "H" workpoints at each end of diagonal brace.

DRAFT - NOT FOR CONSTRUCTION

DESIGN OVERSIGHT

SIGN OFF DATE

	BY	CHECKED
DESIGN	M. KLEYMANN	X
DETAILS	J. VALENZUELA	X
QUANTITIES	X	X

PREPARED FOR THE STATE OF CALIFORNIA DEPARTMENT OF TRANSPORTATION

M. KLEYMANN
PROJECT ENGINEER

BRIDGE No. 36-XXXX
POST MILE X

APTOS CREEK PEDESTRIAN BRIDGE
UPPER BRACING DETAILS No. 4

STRUCTURES DESIGN DETAIL SHEET (ENGLISH) (REVISION 8/16/2021)

DATE PLOTTED => 4/1/2025
FILE => 21_Aptos Creek PB_BDT4.dwg

TIME PLOTTED => 12:22 PM
USERNAME => JVALENZUELA

ORIGINAL SCALE IN INCHES FOR REDUCED PLANS 0 1 2 3

PROJECT NUMBER & PHASE:0518000116

COUNTY/ROUTE: SCR/1
CONTRACT No.: 05-0C734

DISREGARD PRINTS BEARING EARLIER REVISION DATES →

REVISION DATES

SHEET 21 OF 39

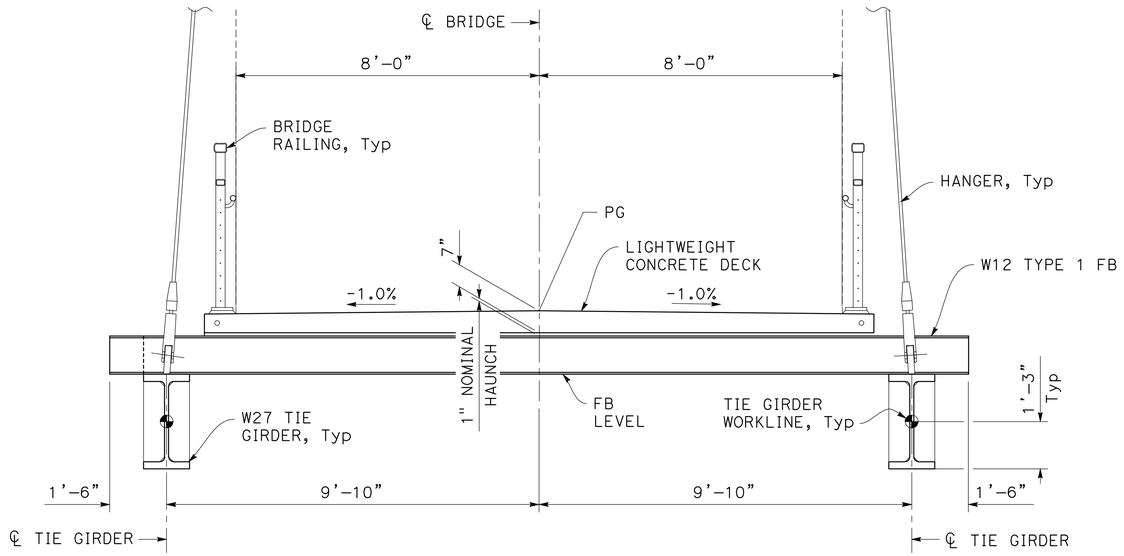

TYPICAL SECTION AT TYPE 1 FB

1/2" = 1'-0"

LEGEND:

GS1 Tie Girder Splice Number

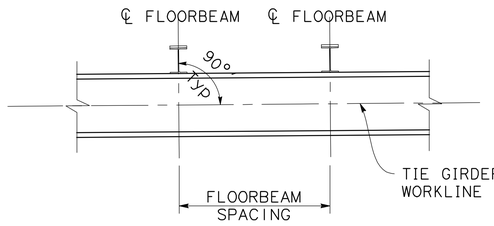

FLOORBEAM SPACING DETAIL

NTS

NOTES:

1. See "HANGER GEOMETRY AND DETAILS" sheet for details of hanger work point B2.
2. Floor beams are oriented perpendicular to tie girder top flange (i.e. webs are not plumb). Floor beam horizontal spacing is given along top of tie girder top flange.
3. For Arch Knuckle details, see "ARCH RIB DETAILS No. 2" sheet.
4. See "ELECTRICAL PLANS" for details not shown.

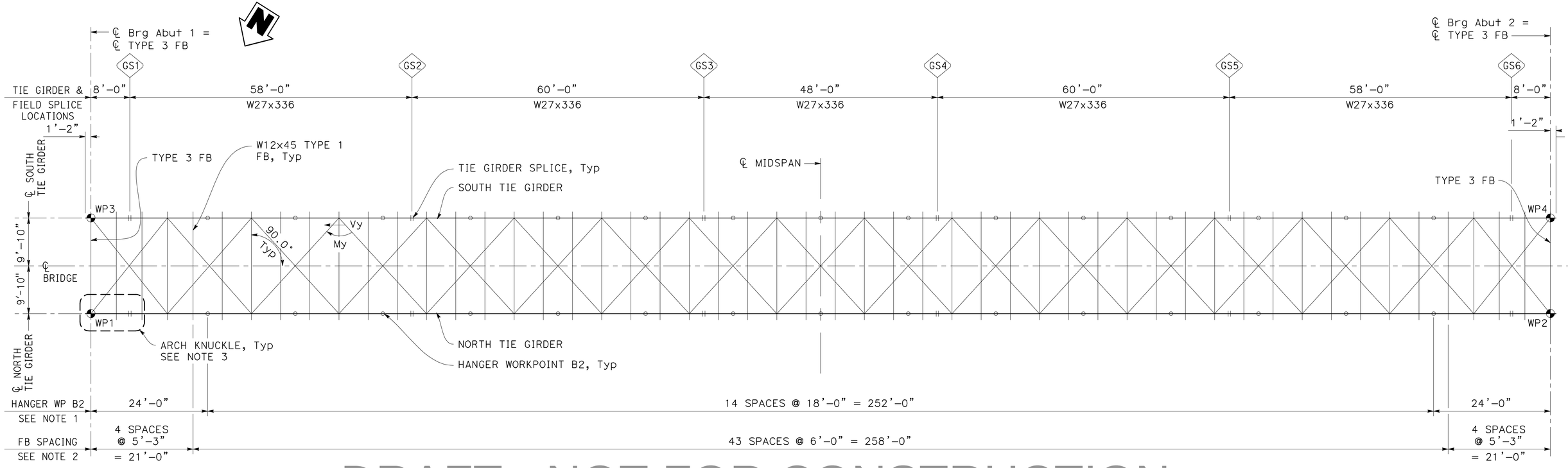

DECK FRAMING PLAN

1" = 10'

DRAFT - NOT FOR CONSTRUCTION

Dist	COUNTY	ROUTE	POST MILES TOTAL PROJECT	SHEET No.	TOTAL SHEETS
5	SCR	1	8.1/10.7	----	931

REGISTERED CIVIL ENGINEER DATE

PLANS APPROVAL DATE

REGISTERED PROFESSIONAL ENGINEER — MATTHEW KLEYMANN — No. 91100 — Exp. 3/31/26 — CIVIL — STATE OF CALIFORNIA

THE STATE OF CALIFORNIA OR ITS OFFICERS OR AGENTS SHALL NOT BE RESPONSIBLE FOR THE ACCURACY OR COMPLETENESS OF SCANNED COPIES OF THIS PLAN SHEET.

SCCRTC
1523 PACIFIC AVE
SANTA CRUZ, CA 95060

MARK THOMAS
701 UNIVERSITY AVE, STE 200
SACRAMENTO, CA 95825

DESIGN OVERSIGHT

SIGN OFF DATE

	BY	CHECKED
DESIGN	M. KLEYMANN	X
DETAILS	J. VALENZUELA	X
QUANTITIES	X	X

PREPARED FOR THE STATE OF CALIFORNIA DEPARTMENT OF TRANSPORTATION

M. KLEYMANN
PROJECT ENGINEER

BRIDGE No. 36-XXXX
POST MILE X

APTOS CREEK PEDESTRIAN BRIDGE

DECK FRAMING PLAN

STRUCTURES DESIGN DETAIL SHEET (ENGLISH) (REVISION 8/16/2021)

DATE PLOTTED => 4/1/2025
FILE => 22_Aptos Creek PB_FRM.dwg
TIME PLOTTED => 12:22 PM
USERNAME => JVALENZUELA

ORIGINAL SCALE IN INCHES FOR REDUCED PLANS 0 1 2 3

PROJECT NUMBER & PHASE:0518000116
COUNTY/ROUTE: SCR/1
CONTRACT No.: 05-0C734

DISREGARD PRINTS BEARING EARLIER REVISION DATES

REVISION DATES	SHEET	OF
	20	39

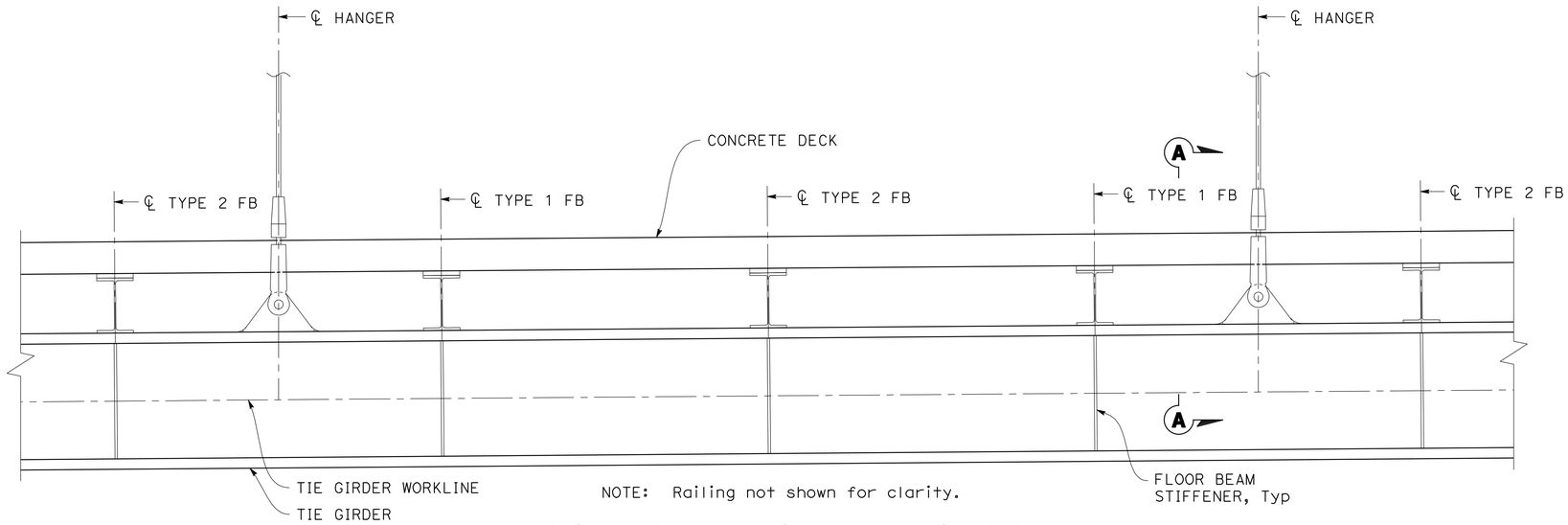

NOTE: Railing not shown for clarity.

TYPICAL ELEVATION - TIE GIRDER

3/4" = 1'-0"

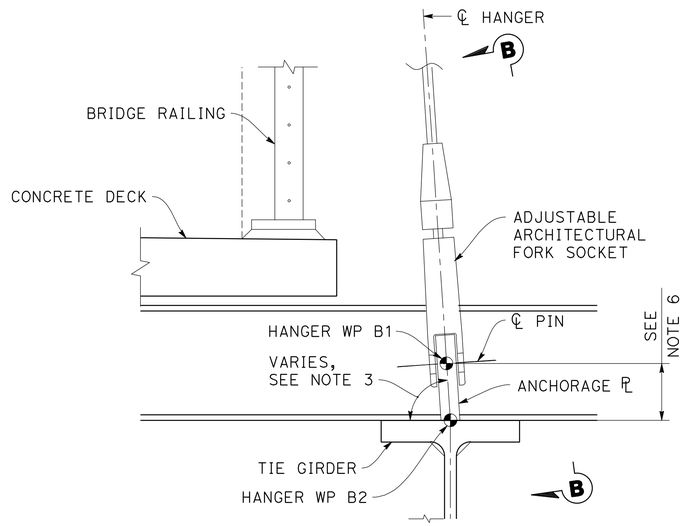

SECTION A-A

1 1/2" = 1'-0"

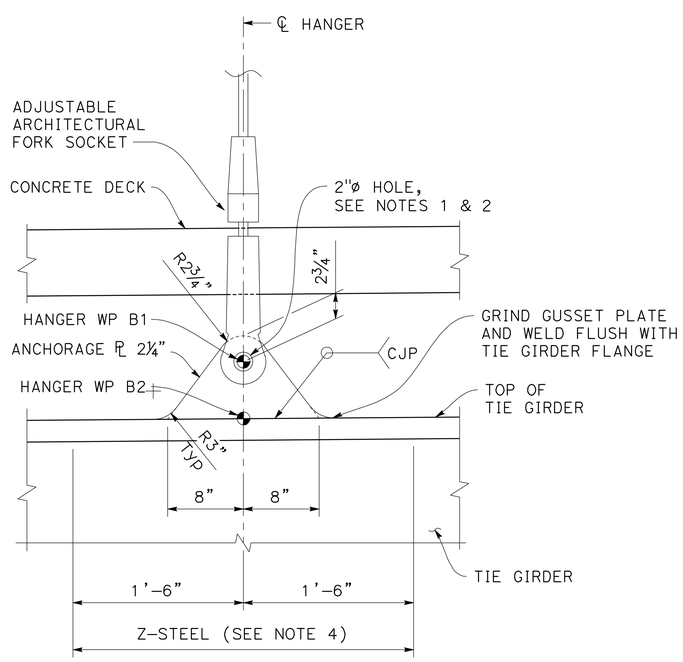

SECTION B-B

1 1/2" = 1'-0"

(Section taken in the plane of the anchorage ℄ /hanger)

DRAFT - NOT FOR CONSTRUCTION

Dist	COUNTY	ROUTE	POST MILES TOTAL PROJECT	SHEET No.	TOTAL SHEETS
5	SCR	1	8.1/10.7	----	931

REGISTERED CIVIL ENGINEER DATE

PLANS APPROVAL DATE

REGISTERED PROFESSIONAL ENGINEER — MATTHEW KLEYMANN — No. 91100 — Exp. 3/31/26 — CIVIL — STATE OF CALIFORNIA

THE STATE OF CALIFORNIA OR ITS OFFICERS OR AGENTS SHALL NOT BE RESPONSIBLE FOR THE ACCURACY OR COMPLETENESS OF SCANNED COPIES OF THIS PLAN SHEET.

SCCRTC
1523 PACIFIC AVE
SANTA CRUZ, CA 95060

MARK THOMAS
701 UNIVERSITY AVE, STE 200
SACRAMENTO, CA 95825

NOTES:

1. Anchorage plates and boss plates are detailed based on the dimensional requirements of WIRECO Structures 1"ø architectural adjustable fork sockets as shown on "HANGER GEOMETRY AND DETAILS" sheet. Prior to fabrication, contractor must receive confirmation from hanger system fabricator that dimensions of anchorage plates are appropriate for the final details of hanger system. Pin hole diameter must not be more than 0.03125 inches greater than the pin diameter and the anchorage plate shall not be less than $\frac{1}{16}$" less than the anchorage fork width, after galvanizing. If a different hanger manufacturer or product is selected, the contractor must verify fit up and capacity of hanger anchorages and make any adjustments necessary. Any changes must be submitted to the Engineer for review and approval.
2. Anchorage plate holes must be bored with a 125 micro-inch surface finish across the total thickness of the assembly.
3. Align anchorage plate and center of pin hole along the chord defined by the T1-B2 Workpoints on "HANGER DATA" sheet. Angle of plane varies for each hanger.
4. Tie girder top flange (towards ℄ bridge) must satisfy ASTM A770 through thickness tension testing for the area shown.
5. Anchorage plates and associated welds are designed for the minimum breaking load of the hanger.
6. For location of cable Workpoints, see "HANGER GEOMETRY AND DETAILS" sheet.
7. For Floor beam stiffener details, see "FLOOR BEAM TYPE 1 AND TYPE 2 DETAILS" sheet.

DESIGN OVERSIGHT

SIGN OFF DATE

	BY	CHECKED
DESIGN	M. KLEYMANN	X
DETAILS	J. VALENZUELA	X
QUANTITIES	X	X

PREPARED FOR THE STATE OF CALIFORNIA DEPARTMENT OF TRANSPORTATION

M. KLEYMANN
PROJECT ENGINEER

BRIDGE No. 36-XXXX
POST MILE X

APTOS CREEK PEDESTRIAN BRIDGE

TIE GIRDER DETAILS No. 1

STRUCTURES DESIGN DETAIL SHEET (ENGLISH) (REVISION 8/16/2021)

DATE PLOTTED => 4/1/2025 TIME PLOTTED => 12:22 PM
FILE => 23_Aptos Creek PB_GDT1.dwg USERNAME => JVALENZUELA

ORIGINAL SCALE IN INCHES FOR REDUCED PLANS 0 1 2 3

PROJECT NUMBER & PHASE: 0518000116
COUNTY/ROUTE: SCR/1
CONTRACT No.: 05-0C734

DISREGARD PRINTS BEARING EARLIER REVISION DATES →

REVISION DATES				SHEET	OF
				23	39

Dist	COUNTY	ROUTE	POST MILES TOTAL PROJECT	SHEET No.	TOTAL SHEETS
5	SCR	1	8.1/10.7	817	931

REGISTERED CIVIL ENGINEER DATE

PLANS APPROVAL DATE

REGISTERED PROFESSIONAL ENGINEER — MATTHEW KLEYMANN — No. 91100 — Exp. 3/31/26 — CIVIL — STATE OF CALIFORNIA

THE STATE OF CALIFORNIA OR ITS OFFICERS OR AGENTS SHALL NOT BE RESPONSIBLE FOR THE ACCURACY OR COMPLETENESS OF SCANNED COPIES OF THIS PLAN SHEET.

SCCRTC
1523 PACIFIC AVE
SANTA CRUZ, CA 95060

MARK THOMAS
701 UNIVERSITY AVE, STE 200
SACRAMENTO, CA 95825

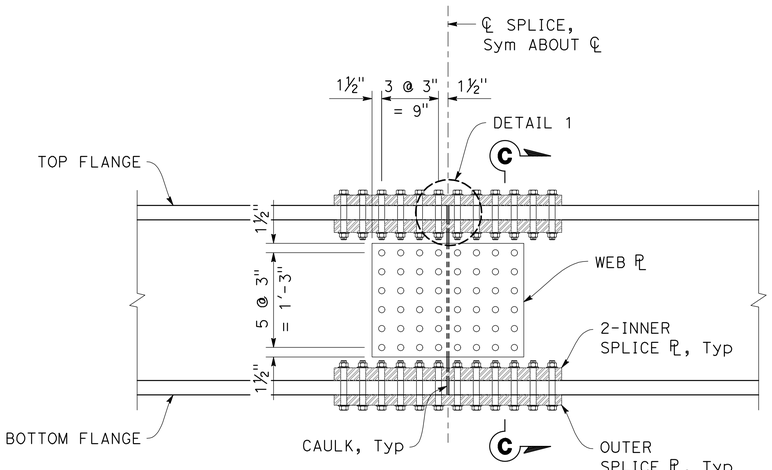

SIDE VIEW

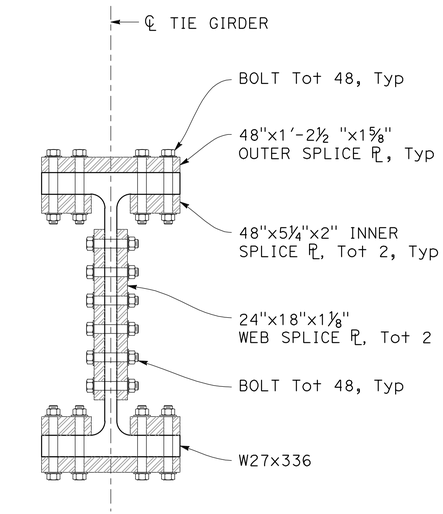

SECTION C-C
1 1/2" = 1'-0"

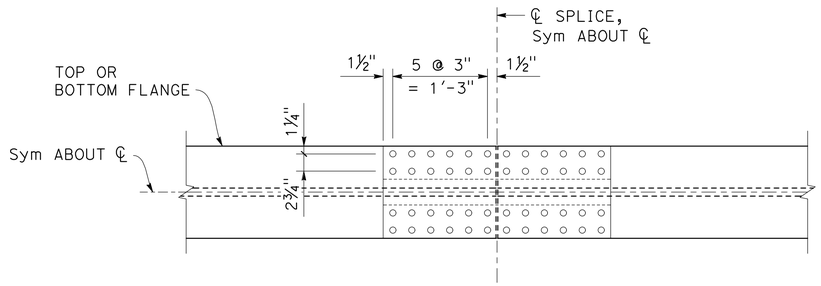

FLANGE OUTER SPLICE

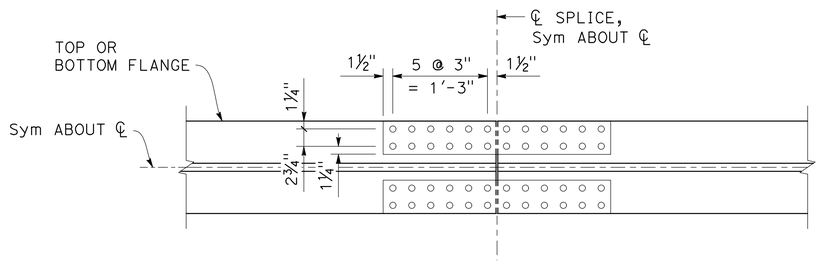

FLANGE INNER SPLICE

TIE GIRDER SPLICE DETAILS
1" = 1'-0"

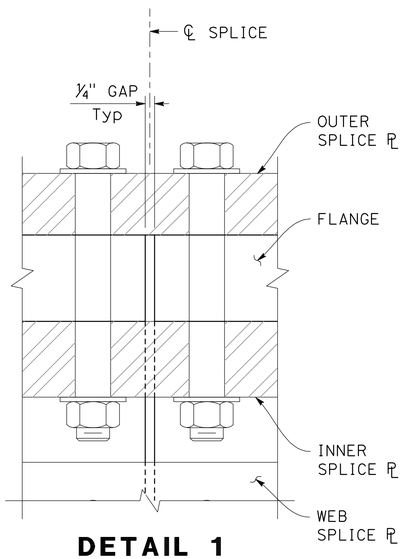

DETAIL 1
6" = 1'-0"

DRAFT - NOT FOR CONSTRUCTION

DESIGN OVERSIGHT	DESIGN	BY M. KLEYMANN	CHECKED X	PREPARED FOR THE STATE OF CALIFORNIA DEPARTMENT OF TRANSPORTATION	M. KLEYMANN, PROJECT ENGINEER
SIGN OFF DATE	DETAILS	BY J. VALENZUELA	CHECKED X		BRIDGE No. 36-XXXX; POST MILE X
	QUANTITIES	BY X	CHECKED X		APTOS CREEK PEDESTRIAN BRIDGE — TIE GIRDER DETAILS No. 2

STRUCTURES DESIGN DETAIL SHEET (ENGLISH) (REVISION 8/16/2021)

DATE PLOTTED => 5/7/2025 TIME PLOTTED => 5:12 PM
FILE => 24_Aptos Creek PB_GDT2.dwg USERNAME => JVALENZUELA

ORIGINAL SCALE IN INCHES FOR REDUCED PLANS 0 1 2 3

PROJECT NUMBER & PHASE:0518000116 COUNTY/ROUTE: SCR/1 CONTRACT No.: 05-0C734

DISREGARD PRINTS BEARING EARLIER REVISION DATES →

REVISION DATES

SHEET 24 OF 39

Dist	COUNTY	ROUTE	POST MILES TOTAL PROJECT	SHEET No.	TOTAL SHEETS
5	SCR	1	8.1/10.7	818	931

REGISTERED CIVIL ENGINEER DATE

PLANS APPROVAL DATE

MATTHEW KLEYMANN No. 91100 Exp. 3/31/26 CIVIL — REGISTERED PROFESSIONAL ENGINEER — STATE OF CALIFORNIA

THE STATE OF CALIFORNIA OR ITS OFFICERS OR AGENTS SHALL NOT BE RESPONSIBLE FOR THE ACCURACY OR COMPLETENESS OF SCANNED COPIES OF THIS PLAN SHEET.

SCCRTC
1523 PACIFIC AVE
SANTA CRUZ, CA 95060

MARK THOMAS
701 UNIVERSITY AVE, STE 200
SACRAMENTO, CA 95825

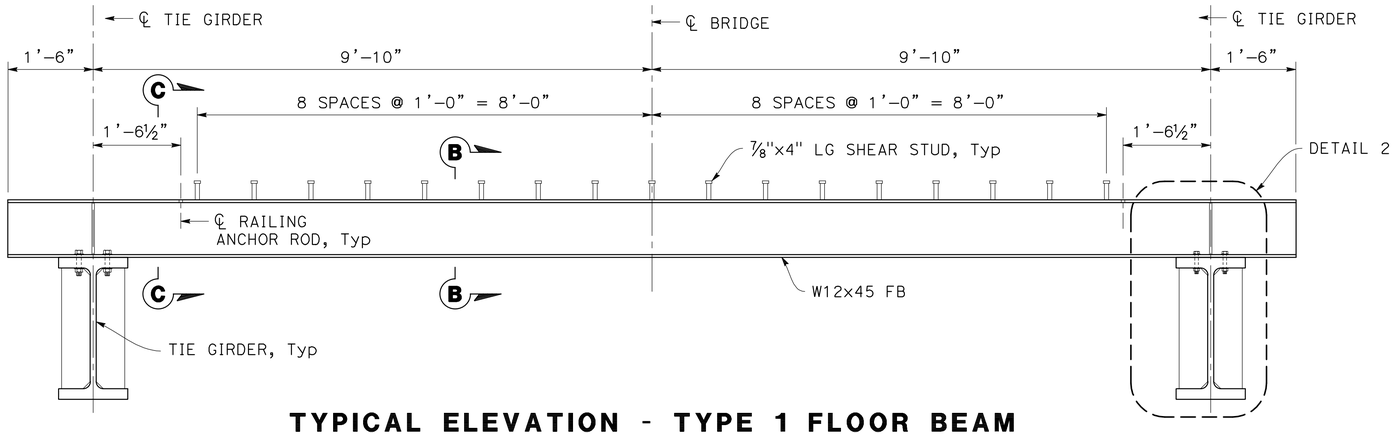

TYPICAL ELEVATION - TYPE 1 FLOOR BEAM

3/4" = 1'-0"

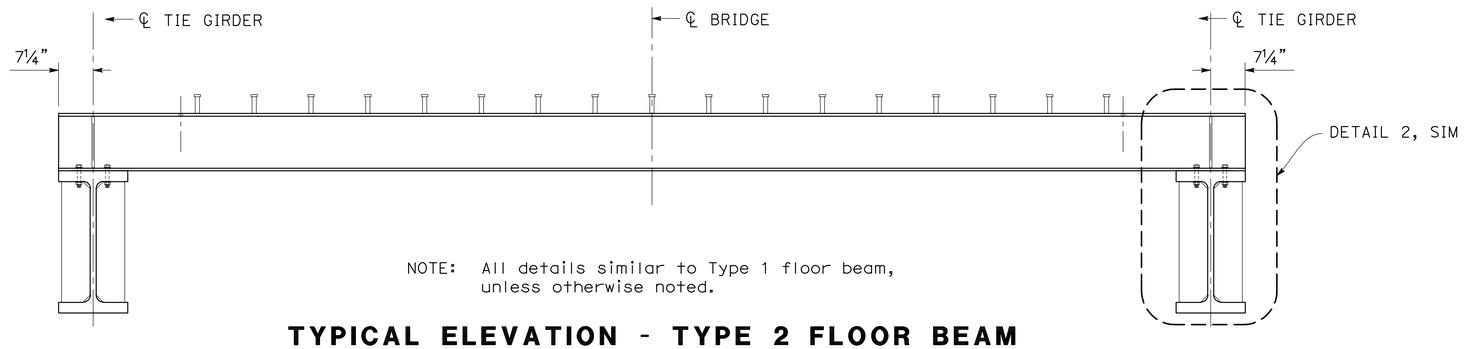

NOTE: All details similar to Type 1 floor beam, unless otherwise noted.

TYPICAL ELEVATION - TYPE 2 FLOOR BEAM

3/4" = 1'-0"

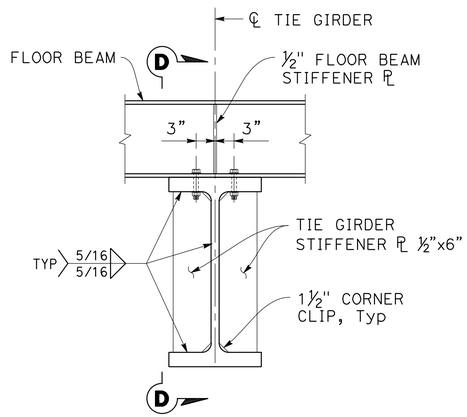

DETAIL 2

1" = 1'-0"

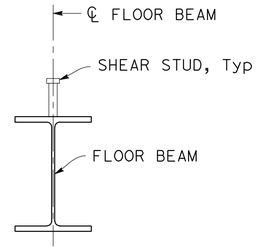

SECTION B-B

1 1/2" = 1'-0"

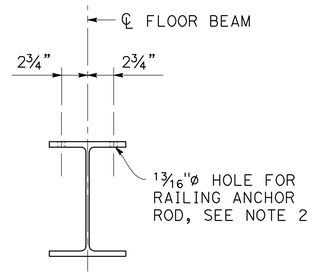

SECTION C-C

1 1/2" = 1'-0"

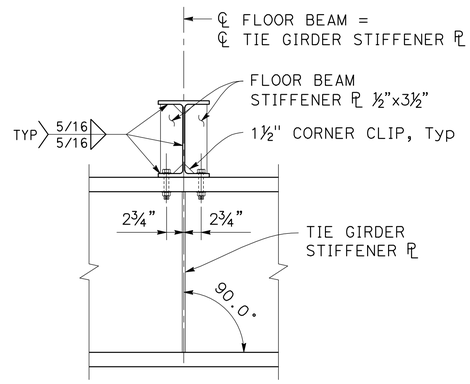

SECTION D-D

1 1/2" = 1'-0"

NOTES:

1. Expected floor beam dead load deflection is less than ¼". Therefore camber of the floor beams is not required. Fabricate/orient floor beams such any out-of-straightness due to allowable mill tolerances results in the floor beam being in a concave position.
2. For additional details of railing anchor rods, see "METAL BRIDGE RAILING DETAILS" sheets.

DRAFT - NOT FOR CONSTRUCTION

DESIGN OVERSIGHT		DESIGN	BY M. KLEYMANN	CHECKED X	PREPARED FOR THE STATE OF CALIFORNIA DEPARTMENT OF TRANSPORTATION
SIGN OFF DATE		DETAILS	BY J. VALENZUELA	CHECKED X	M. KLEYMANN, PROJECT ENGINEER
		QUANTITIES	BY X	CHECKED X	BRIDGE No. 36-XXXX; POST MILE X

APTOS CREEK PEDESTRIAN BRIDGE

FLOOR BEAM TYPE 1 AND TYPE 2 DETAILS

STRUCTURES DESIGN DETAIL SHEET (ENGLISH) (REVISION 8/16/2021)

DATE PLOTTED => 4/1/2025 TIME PLOTTED => 12:23 PM
FILE => 25_Aptos Creek PB_FB1DT1.dwg USERNAME => JVALENZUELA

ORIGINAL SCALE IN INCHES FOR REDUCED PLANS 0 1 2 3

PROJECT NUMBER & PHASE:0518000116 COUNTY/ROUTE:SCR/1 CONTRACT No.:05-0C734

DISREGARD PRINTS BEARING EARLIER REVISION DATES

REVISION DATES | SHEET 25 | OF 39

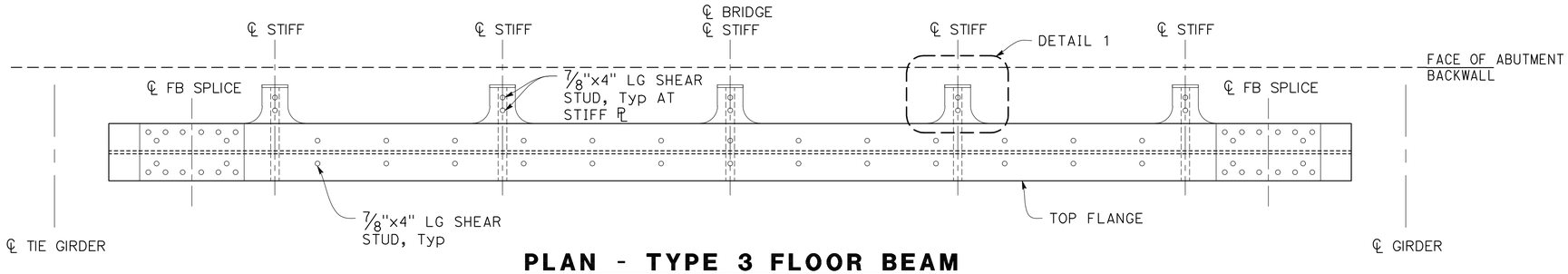

PLAN - TYPE 3 FLOOR BEAM

1" = 1'-0"

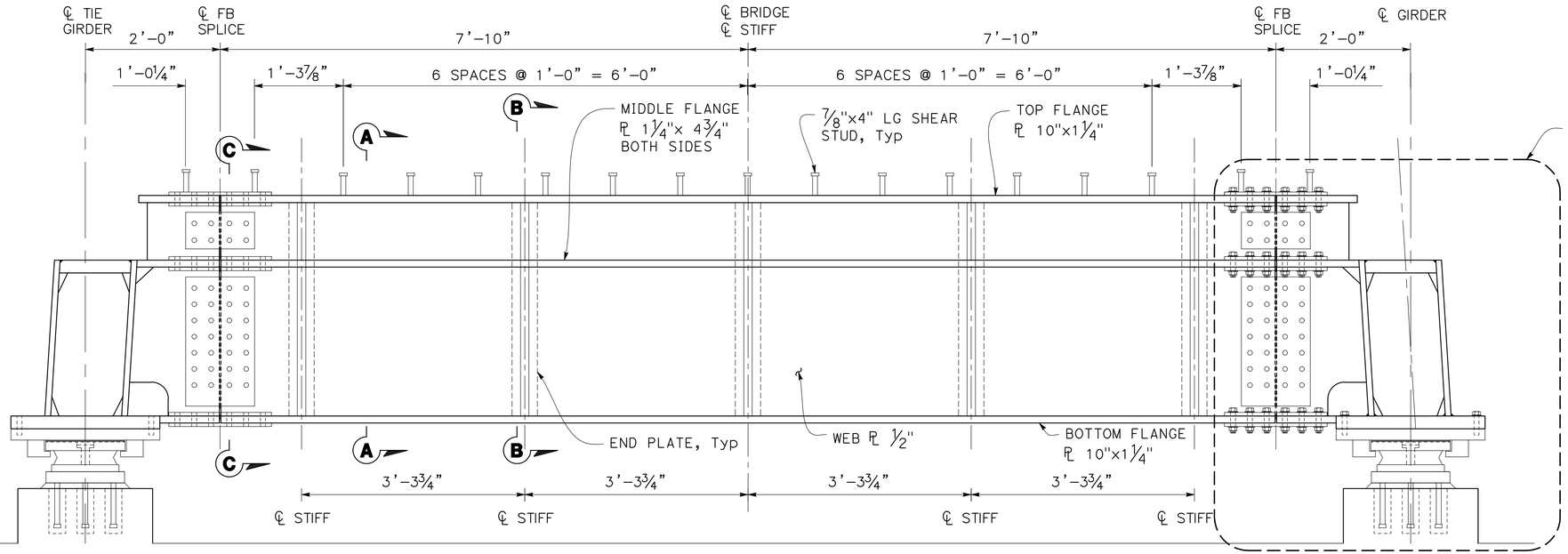

ELEVATION - TYPE 3 FLOOR BEAM

1" = 1'-0"

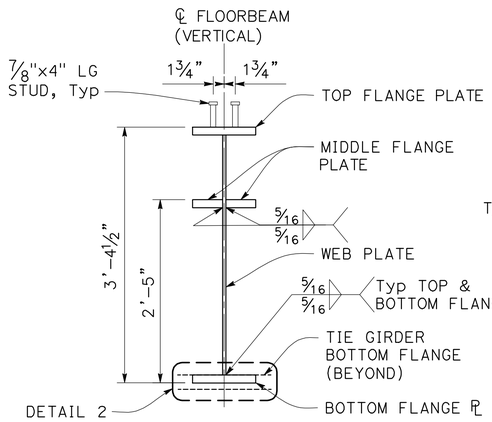

SECTION A-A

1" = 1'-0"

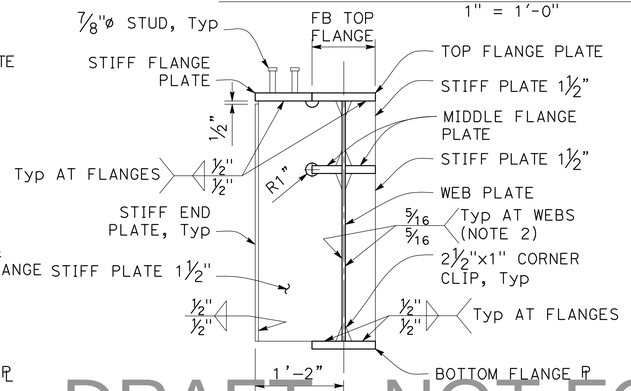

SECTION B-B

1" = 1'-0"

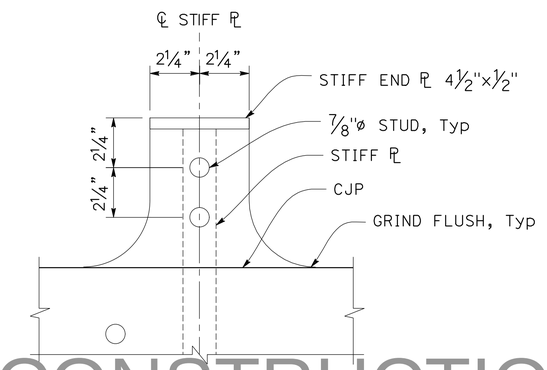

DETAIL 1

NO SCALE

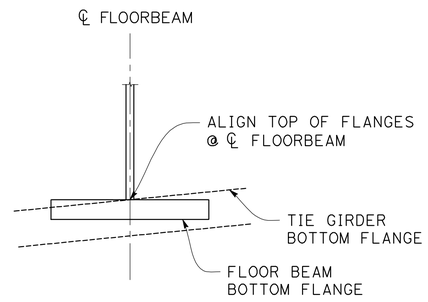

DETAIL 2

NO SCALE

DRAFT - NOT FOR CONSTRUCTION

Dist	COUNTY	ROUTE	POST MILES TOTAL PROJECT	SHEET No.	TOTAL SHEETS
5	SCR	1	8.1/10.7	----	931

REGISTERED CIVIL ENGINEER DATE

PLANS APPROVAL DATE

MATTHEW KLEYMANN No. 91100 Exp. 3/31/26 CIVIL — REGISTERED PROFESSIONAL ENGINEER — STATE OF CALIFORNIA

THE STATE OF CALIFORNIA OR ITS OFFICERS OR AGENTS SHALL NOT BE RESPONSIBLE FOR THE ACCURACY OR COMPLETENESS OF SCANNED COPIES OF THIS PLAN SHEET.

SCCRTC
1523 PACIFIC AVE
SANTA CRUZ, CA 95060

MARK THOMAS
701 UNIVERSITY AVE, STE 200
SACRAMENTO, CA 95825

NOTES:

1. For detail 3, see "FLOOR BEAM TYPE 3 DETAILS No. 2" sheet.
2. For weld termination details at corners of stiffeners see detail 1 on "ARCH RIB DETAILS No. 3" sheet.

DESIGN OVERSIGHT

SIGN OFF DATE

	BY	CHECKED
DESIGN	M. KLEYMANN	X
DETAILS	J. VALENZUELA	X
QUANTITIES	X	X

PREPARED FOR THE STATE OF CALIFORNIA DEPARTMENT OF TRANSPORTATION

M. KLEYMANN
PROJECT ENGINEER

BRIDGE No. 36-XXXX
POST MILE X

APTOS CREEK PEDESTRIAN BRIDGE

FLOOR BEAM TYPE 3 DETAILS No. 1

STRUCTURES DESIGN DETAIL SHEET (ENGLISH) (REVISION 8/16/2021)

DATE PLOTTED => 4/1/2025 TIME PLOTTED => 12:24 PM
FILE => 26_Aptos Creek PB_FB3DT1.dwg USERNAME => JVALENZUELA

ORIGINAL SCALE IN INCHES FOR REDUCED PLANS 0 1 2 3

PROJECT NUMBER & PHASE:0518000116

COUNTY/ROUTE: SCR/1
CONTRACT No.: 05-0C734

DISREGARD PRINTS BEARING EARLIER REVISION DATES →

REVISION DATES	SHEET	OF
	26	39

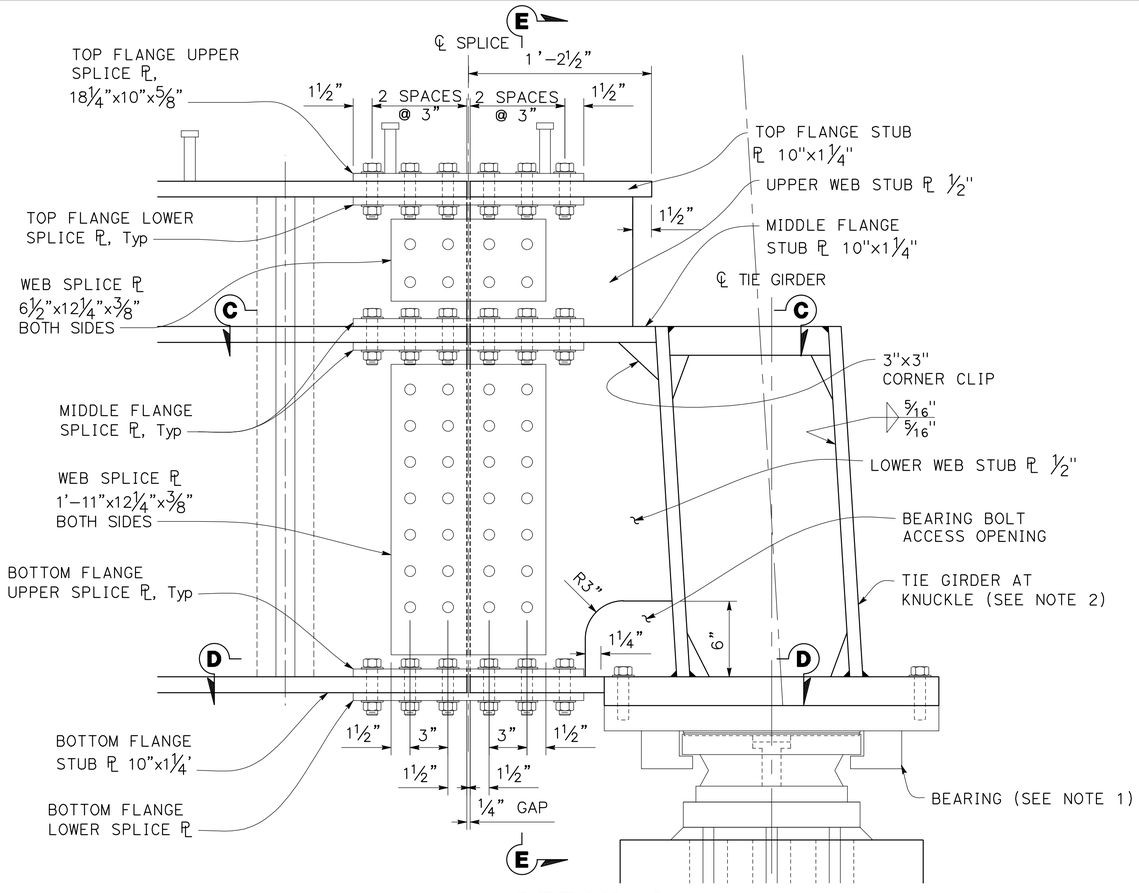

DETAIL 3
2" = 1'-0"

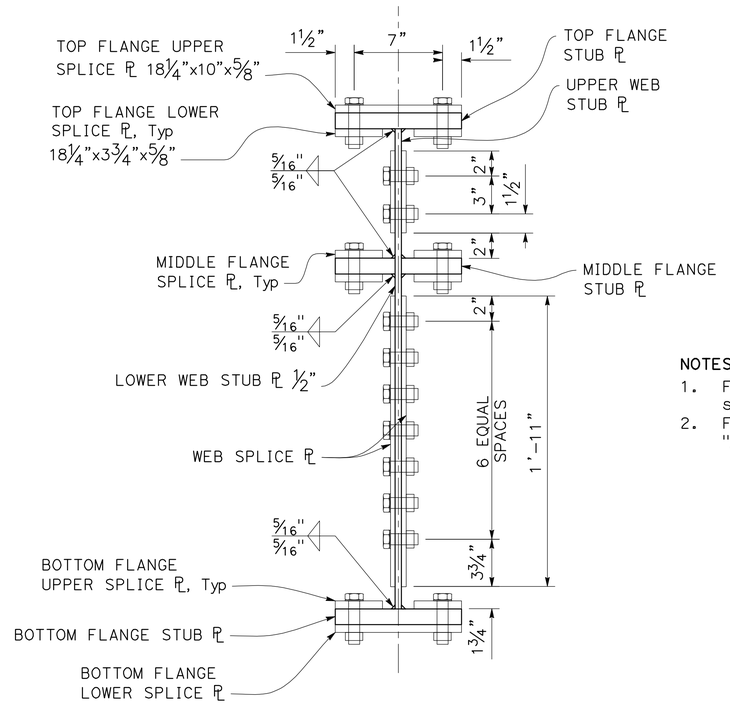

SECTION E-E
2" = 1'-0"

NOTES:
1. For bearing details, see "BEARING DETAILS" sheets.
2. For tie girder details at knuckle, see "ARCH RIB DETAILS No. 2-4" sheets.

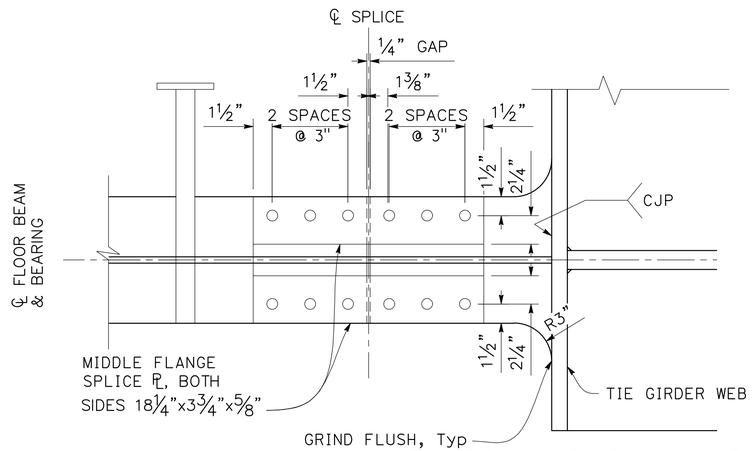

SECTION C-C
2" = 1'-0"

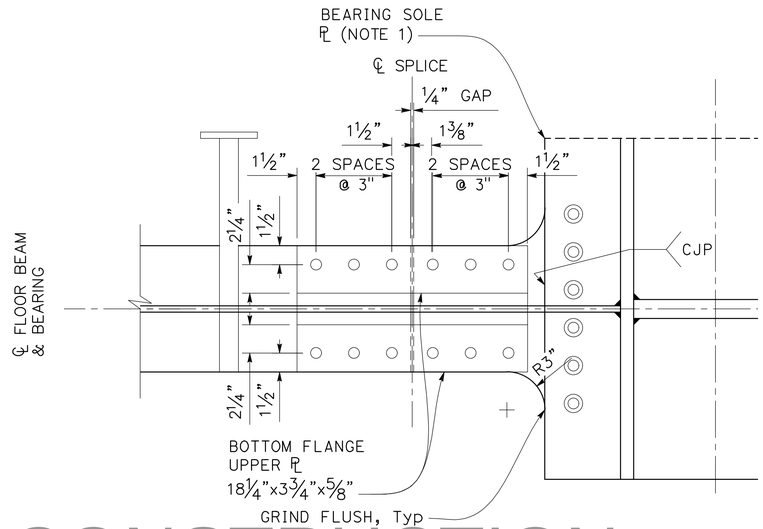

SECTION D-D
2" = 1'-0"

DRAFT - NOT FOR CONSTRUCTION

Dist	COUNTY	ROUTE	POST MILES TOTAL PROJECT	SHEET No.	TOTAL SHEETS
5	SCR	1	8.1/10.7	----	931

REGISTERED CIVIL ENGINEER — DATE

PLANS APPROVAL DATE

REGISTERED PROFESSIONAL ENGINEER — MATTHEW KLEYMANN — No. 91100 — Exp. 3/31/26 — CIVIL — STATE OF CALIFORNIA

THE STATE OF CALIFORNIA OR ITS OFFICERS OR AGENTS SHALL NOT BE RESPONSIBLE FOR THE ACCURACY OR COMPLETENESS OF SCANNED COPIES OF THIS PLAN SHEET.

SCCRTC
1523 PACIFIC AVE
SANTA CRUZ, CA 95060

MARK THOMAS
701 UNIVERSITY AVE, STE 200
SACRAMENTO, CA 95825

DESIGN OVERSIGHT

SIGN OFF DATE

	BY	CHECKED
DESIGN	M. KLEYMANN	X
DETAILS	J. VALENZUELA	X
QUANTITIES	X	X

PREPARED FOR THE STATE OF CALIFORNIA DEPARTMENT OF TRANSPORTATION

M. KLEYMANN
PROJECT ENGINEER

BRIDGE No. 36-XXXX
POST MILE X

APTOS CREEK PEDESTRIAN BRIDGE
FLOOR BEAM TYPE 3 DETAILS No. 2

STRUCTURES DESIGN DETAIL SHEET (ENGLISH) (REVISION 8/16/2021)

DATE PLOTTED => 4/1/2025 TIME PLOTTED => 12:24 PM
FILE => 27_Aptos Creek PB_FB3DT2.dwg USERNAME => JVALENZUELA

ORIGINAL SCALE IN INCHES FOR REDUCED PLANS 0 1 2 3

PROJECT NUMBER & PHASE: 0518000116
COUNTY/ROUTE: SCR/1
CONTRACT No.: 05-0C734

DISREGARD PRINTS BEARING EARLIER REVISION DATES

REVISION DATES	SHEET	OF
	27	39

Dist	COUNTY	ROUTE	POST MILES TOTAL PROJECT	SHEET No.	TOTAL SHEETS
5	SCR	1	8.1/10.7	821	931

REGISTERED CIVIL ENGINEER DATE

PLANS APPROVAL DATE

REGISTERED PROFESSIONAL ENGINEER — MATTHEW KLEYMANN — No. 91100 — Exp. 3/31/26 — CIVIL — STATE OF CALIFORNIA

THE STATE OF CALIFORNIA OR ITS OFFICERS OR AGENTS SHALL NOT BE RESPONSIBLE FOR THE ACCURACY OR COMPLETENESS OF SCANNED COPIES OF THIS PLAN SHEET.

SCCRTC
1523 PACIFIC AVE
SANTA CRUZ, CA 95060

MARK THOMAS
701 UNIVERSITY AVE, STE 200
SACRAMENTO, CA 95825

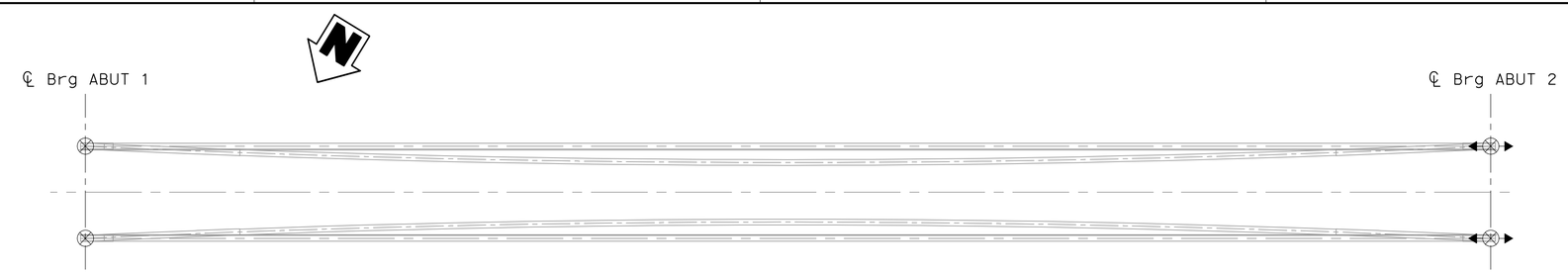

BEARING PLAN

1/16" = 1'-0"

LEGEND:

⊗ FIXED DISC BEARING WITH SEISMIC FUSE

◄⊗► UNIDIRECTIONAL DISC BEARING WITH FREE MOVEMENT IN THE DIRECTION SHOWN BY ARROWS

Location	Bearing Type	Longit Slope %	VERTICAL ****							TRANSVERSE			LONGIITUDINAL			DISPLACEMENT			ROTATION ***			Top of Bearing Elev
			DL	SERVICE (MAX)	SERVICE (MIN)	STRENGTH (MAX)	STRENGTH (MIN)	EXTREME (MAX)	EXTREME (MIN)	SERVICE	STRENGTH	EXTREME	SERVICE	STRENGTH	EXTREME	SERVICE	STRENGTH	EXTREME ****	SERVICE	STRENGTH	EXTREME	
			KIP	KIP	KIP	KIP	KIP	KIP	KIP	KIP	KIP	KIP	KIP	KIP	KIP	IN	IN	IN	RAD	RAD	RAD	F†
ABUT 1	Type 1	0.80%	186	307	157	422	90	411	-39	15	40	176	26	69	FUSE*	+/- 3 **	+/- 3 **	+/- 12	0.023	0.035	0.016	108.214
ABUT 2	Type 2	0.80%	186	307	157	422	90	411	-39	15	40	176	0	0	0	0	0	+/- 12	0.023	0.035	0.016	110.613

BEARING LOAD TABLE NOTES:

* Type 1 bearings must be designed to fuse at a force of 120 kips ±20 kips. capacity of fuse must be based on expected material properties.

** Bearing movements at abutment 2 include ±1" construction tolerance.

*** Rotations provided in the table include a fabrication and installation tolerance of 5 MRAD.

**** Bearing sole plate and sliding surface does not accommodate full range of seismic displacements as bearings are sacrificial for extreme seismic event.

***** Positive vertical load effect denotes downward force, negative vertical load effect denotes upward force.

BEARING REPLACEMENT NOTES:

A. Permanent structure is designed to accommodate a jacking force of XX kips at the location shown on the plans, corresponding to the dead load of the structure X 1.3 per AASHTO LRFD Section 3.4.3.1.

B. Both bearings at a given abutment must be jacked simultaneously with the maximum lift-off of ¼".

C. Bearing replacement requires grinding off welds between lower bearing plate and masonry plate.

D. Bridge to be closed to public during bearing replacement.

E. Bearing replacement details including jacks, bearing/fill plates, temporary structure restraint and procedures shall be provided by others as part of future bearing replacement design plans.

NOTES:

1. Bearings are based on RJ Watson Disktron bearing. All details of disc bearing assembly including but not limited to: tapered sole plate; masonry plate; and welded connection between lower bearing plate and masonry shall be designed and furnished by the bearing supplier. Total height of the bearing assembly and plan dimension of tapered sole plate and masonry plate must be as shown on the plans. Any changes to total bearing height or plan dimensions shall be submitted for approval along with corresponding modification to the bearing pedestal. Tapered sole plate and masonry plate shall have minimum thickness shown on plans. Bearing design shall meet the requirements of AASHTO LRFD Bridge Design Specifications, 9th Ed.

2. Unless noted otherwise, all dimensions and geometry shown are based on the Reference State condition.

3. Grout pad thickness may vary to accommodate variations in as-built geometry with minimum and maximum thickness of ¼" and 1 ¾", respectively. grout to be Sika 212 or approved equivalent with minimum 28 day compressive strength of 6000 psi.

4. PTFE sheet shall be made from pure unfilled virgin PTFE satisfying the requirements of ASTM D4894-98A and AASHTO LRFD BDS Clause 14.7.2.1. The PTFE sheet must be dimpled and lubricated with dimples conforming to the requirements of AASHTO LRFD BDS Clause 14.7.2.1. Lubricant must be silicone grease, which satisfies society of automative engineers specification SAE-AS8660.

5. Stainless steel plate shall be Type 304, conforming to either ASTM A167 or A264. Sliding surface face must provide a surface finish of 8 micro inches root mean square or better. The minimum thickness of the stainless steel plate must be at least ⅛" thick.

6. Bearing assembly including masonry plate/ anchor stud assembly and must be galvanized or metalized.

7. All steel for bearing assembly shall be ASTM A709 Gr. 50 unless otherwise approved by the Engineer.

8. Notes on this sheet apply to "BEARING DETAILS" sheets.

DRAFT - NOT FOR CONSTRUCTION

DESIGN OVERSIGHT

SIGN OFF DATE

	BY	CHECKED
DESIGN	M. KLEYMANN	X
DETAILS	J. VALENZUELA	X
QUANTITIES	X	X

PREPARED FOR THE STATE OF CALIFORNIA DEPARTMENT OF TRANSPORTATION

M. KLEYMANN
PROJECT ENGINEER

BRIDGE No. 36-XXXX
POST MILE X

APTOS CREEK PEDESTRIAN BRIDGE

BEARING LAYOUT

STRUCTURES DESIGN DETAIL SHEET (ENGLISH) (REVISION 8/16/2021)

DATE PLOTTED => 4/1/2025 TIME PLOTTED => 12:24 PM
FILE => 28_Aptos Creek PB_BRGL.dwg USERNAME => JVALENZUELA

ORIGINAL SCALE IN INCHES FOR REDUCED PLANS 0 1 2 3

PROJECT NUMBER & PHASE:0518000116 COUNTY/ROUTE:SCR/1 CONTRACT No.:05-0C734

DISREGARD PRINTS BEARING EARLIER REVISION DATES

REVISION DATES				SHEET	OF
				28	39

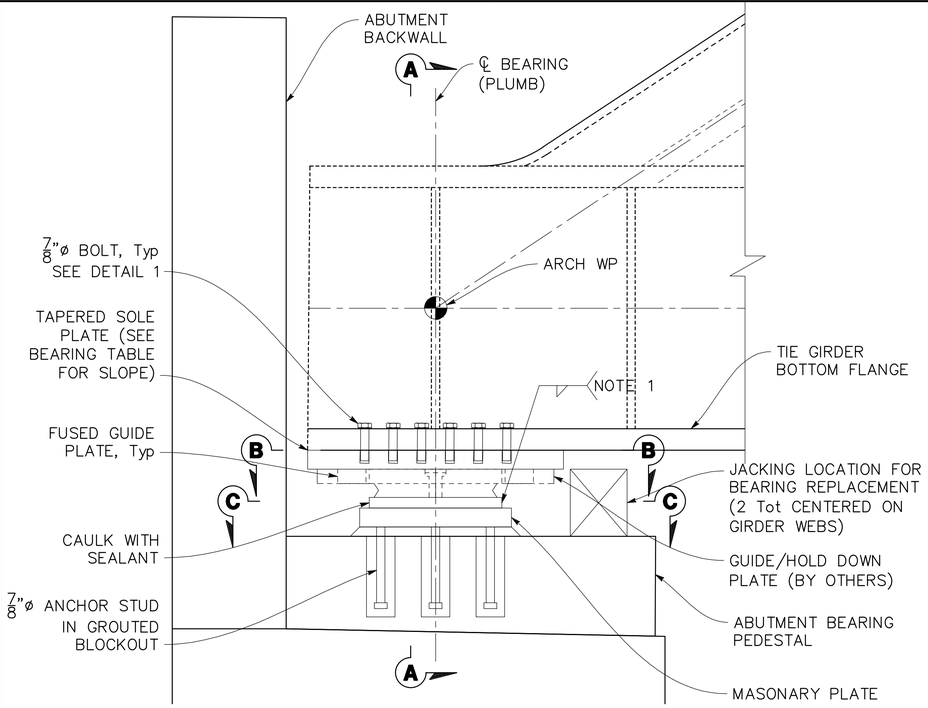

ELEVATION - TYPE 1 BEARING AT ABUTMENT 1

1 1/2" = 1'-0"

NOTES:

1. For bearing table and notes, see "BEARING LAYOUT" sheet.
2. For section C-C, see "BEARING DETAILS No. 2" sheet.

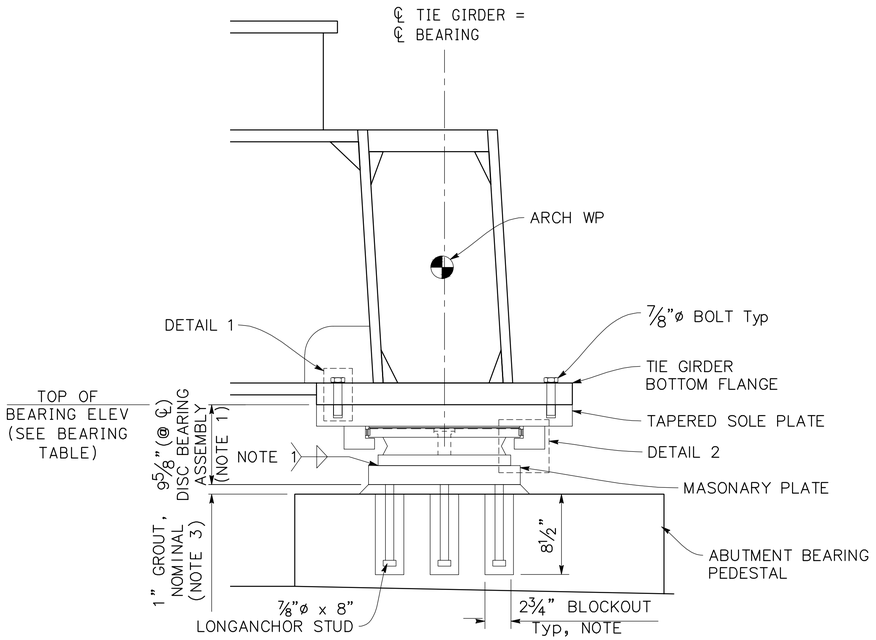

SECTION A-A

1 1/2" = 1'-0"

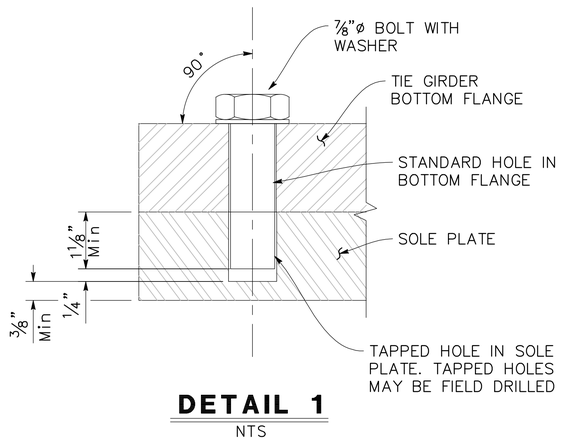

DETAIL 1

NTS

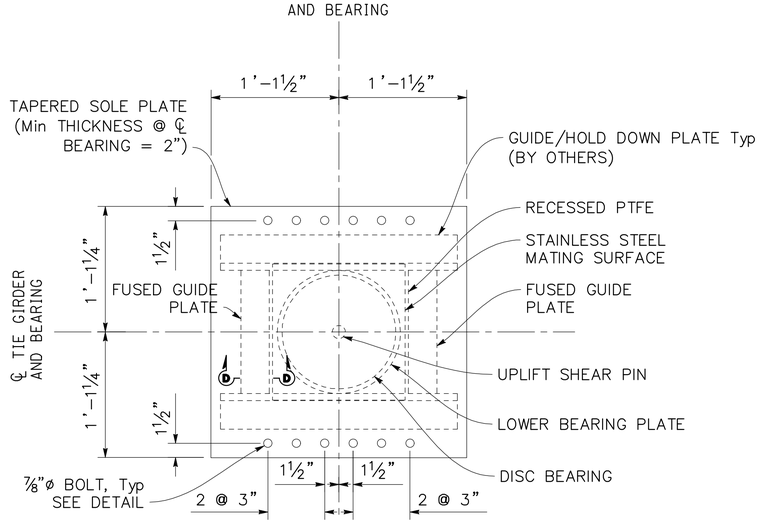

SECTION B-B

1 1/2" = 1'-0"

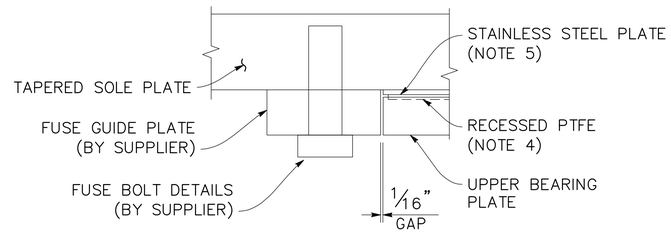

SECTION D-D

6" = 1'-0"

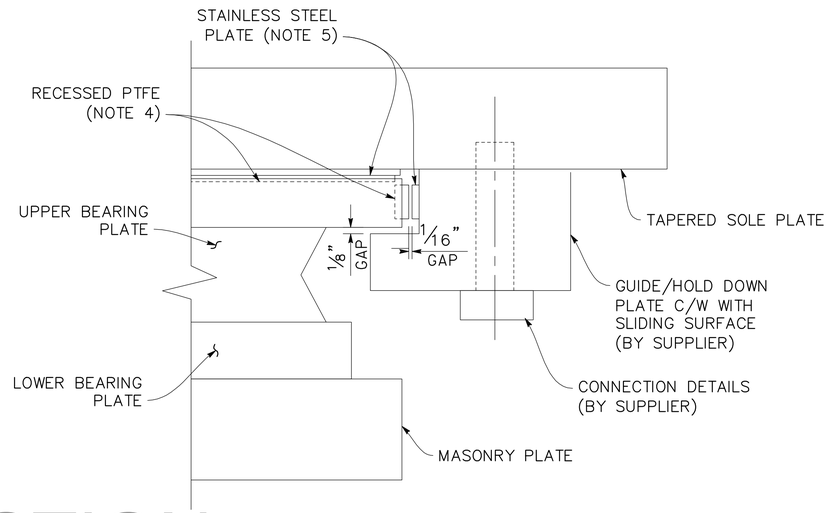

DETAIL 2

NTS

DRAFT - NOT FOR CONSTRUCTION

Dist	COUNTY	ROUTE	POST MILES TOTAL PROJECT	SHEET No.	TOTAL SHEETS
5	SCR	1	8.1/10.7	----	931

REGISTERED CIVIL ENGINEER DATE

PLANS APPROVAL DATE

REGISTERED PROFESSIONAL ENGINEER — MATTHEW KLEYMANN — No. 91100 — Exp. 3/31/26 — CIVIL — STATE OF CALIFORNIA

THE STATE OF CALIFORNIA OR ITS OFFICERS OR AGENTS SHALL NOT BE RESPONSIBLE FOR THE ACCURACY OR COMPLETENESS OF SCANNED COPIES OF THIS PLAN SHEET.

SCCRTC
1523 PACIFIC AVE
SANTA CRUZ, CA 95060

MARK THOMAS
701 UNIVERSITY AVE, STE 200
SACRAMENTO, CA 95825

DESIGN OVERSIGHT

SIGN OFF DATE

	BY	CHECKED
DESIGN	M. KLEYMANN	X
DETAILS	J. VALENZUELA	X
QUANTITIES	X	X

PREPARED FOR THE STATE OF CALIFORNIA DEPARTMENT OF TRANSPORTATION

M. KLEYMANN
PROJECT ENGINEER

BRIDGE No. 36-XXXX
POST MILE X

APTOS CREEK PEDESTRIAN BRIDGE

BEARING DETAILS No. 1

STRUCTURES DESIGN DETAIL SHEET (ENGLISH) (REVISION 8/16/2021)

DATE PLOTTED => 4/1/2025 TIME PLOTTED => 12:25 PM
FILE => 29_Aptos Creek PB_BRDT1.dwg USERNAME => JVALENZUELA

ORIGINAL SCALE IN INCHES FOR REDUCED PLANS 0 1 2 3

PROJECT NUMBER & PHASE: 0518000116

COUNTY/ROUTE: SCR/1
CONTRACT No.: 05-0C734

DISREGARD PRINTS BEARING EARLIER REVISION DATES

REVISION DATES				SHEET	OF
				28	39

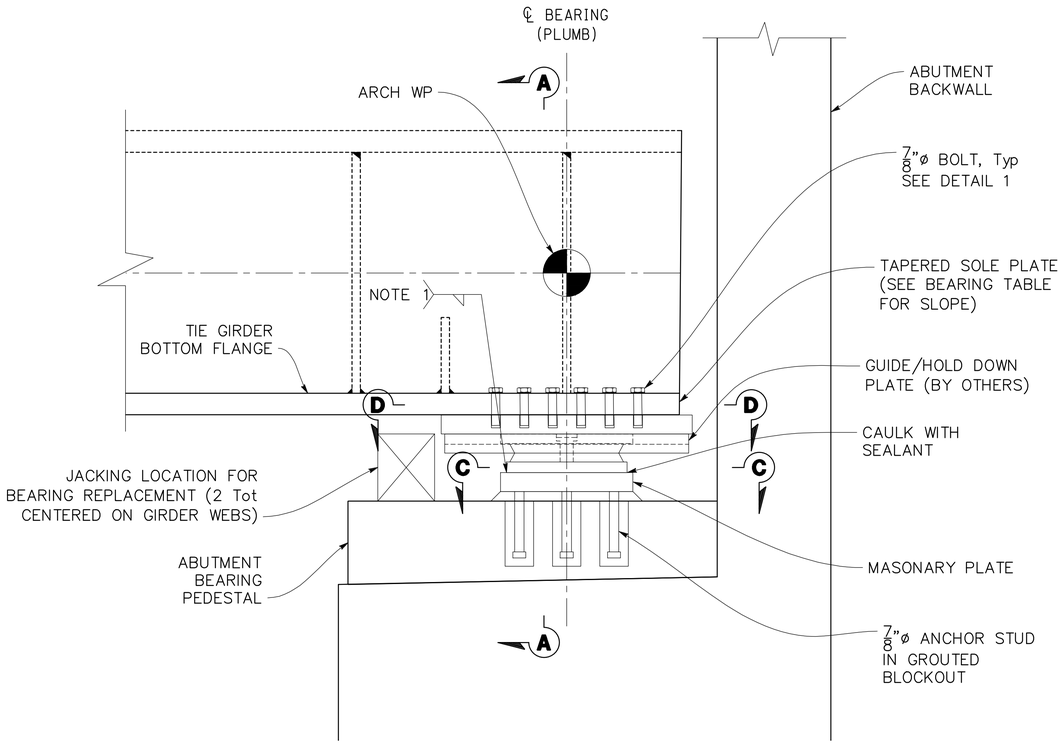

ELEVATION - TYPE 2 BEARING AT ABUTMENT 2

1 1/2" = 1'-0"

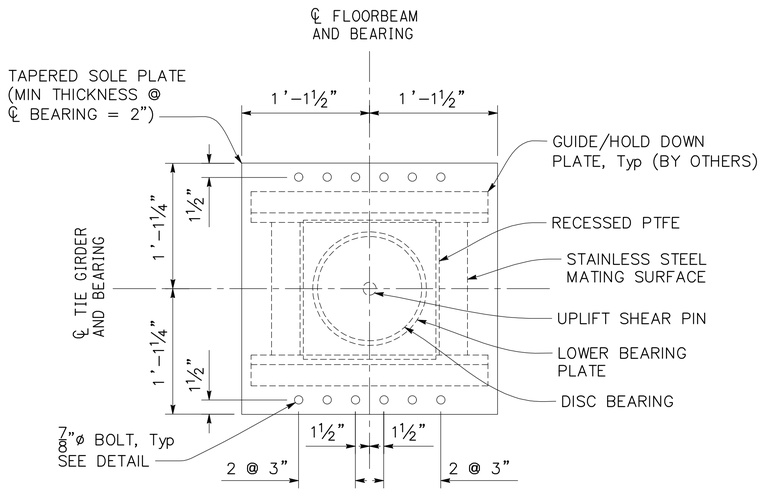

SECTION B-B

1 1/2" = 1'-0"

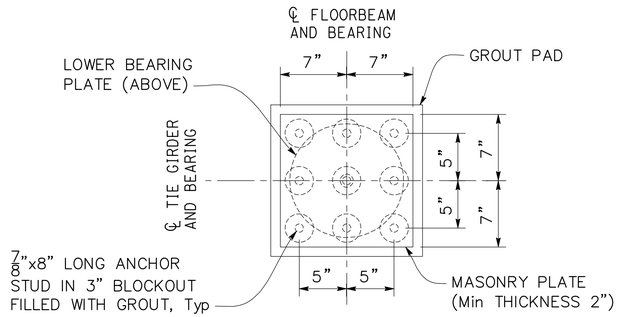

SECTION C-C

1 1/2" = 1'-0"

DRAFT - NOT FOR CONSTRUCTION

Dist	COUNTY	ROUTE	POST MILES TOTAL PROJECT	SHEET No.	TOTAL SHEETS
5	SCR	1	8.1/10.7	----	931

REGISTERED CIVIL ENGINEER DATE

PLANS APPROVAL DATE

REGISTERED PROFESSIONAL ENGINEER — MATTHEW KLEYMANN — No. 91100 — Exp. 3/31/26 — CIVIL — STATE OF CALIFORNIA

THE STATE OF CALIFORNIA OR ITS OFFICERS OR AGENTS SHALL NOT BE RESPONSIBLE FOR THE ACCURACY OR COMPLETENESS OF SCANNED COPIES OF THIS PLAN SHEET.

SCCRTC
1523 PACIFIC AVE
SANTA CRUZ, CA 95060

MARK THOMAS
701 UNIVERSITY AVE, STE 200
SACRAMENTO, CA 95825

NOTES:

1. For bearing table and notes, see "BEARING LAYOUT" sheet.
2. For section A-A and detail 1, see "BEARING DETAILS No. 1" sheet.

DESIGN OVERSIGHT

SIGN OFF DATE

	BY	CHECKED
DESIGN	M. KLEYMANN	X
DETAILS	J. VALENZUELA	X
QUANTITIES	X	X

PREPARED FOR THE
STATE OF CALIFORNIA
DEPARTMENT OF TRANSPORTATION

M. KLEYMANN
PROJECT ENGINEER

BRIDGE No. 36-XXXX
POST MILE X

APTOS CREEK PEDESTRIAN BRIDGE

BEARING DETAILS No. 2

STRUCTURES DESIGN DETAIL SHEET (ENGLISH) (REVISION 8/16/2021)

DATE PLOTTED => 4/1/2025 TIME PLOTTED => 12:25 PM
FILE => 30_Aptos Creek PB_BRDT2.dwg USERNAME => JVALENZUELA

ORIGINAL SCALE IN INCHES FOR REDUCED PLANS 0 1 2 3

PROJECT NUMBER & PHASE: 0518000116

COUNTY/ROUTE: SCR/1
CONTRACT No.: 05-0C734

DISREGARD PRINTS BEARING EARLIER REVISION DATES

REVISION DATES					SHEET	OF
					30	39

Dist	COUNTY	ROUTE	POST MILES TOTAL PROJECT	SHEET No.	TOTAL SHEETS
5	SCR	1	8.1/10.7	----	931

REGISTERED CIVIL ENGINEER DATE

PLANS APPROVAL DATE

REGISTERED PROFESSIONAL ENGINEER — MATTHEW KLEYMANN — No. 91100 — Exp. 3/31/26 — CIVIL — STATE OF CALIFORNIA

THE STATE OF CALIFORNIA OR ITS OFFICERS OR AGENTS SHALL NOT BE RESPONSIBLE FOR THE ACCURACY OR COMPLETENESS OF SCANNED COPIES OF THIS PLAN SHEET.

SCCRTC
1523 PACIFIC AVE
SANTA CRUZ, CA 95060

MARK THOMAS
701 UNIVERSITY AVE, STE 200
SACRAMENTO, CA 95825

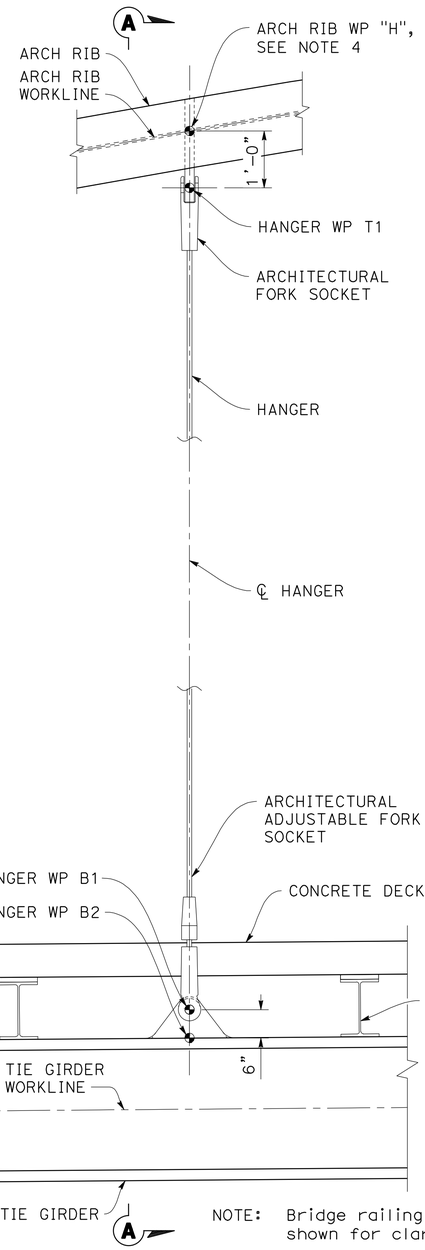

ELEVATION AT HANGER

3/4" = 1'-0"

NORTH ARCH RIB/TIE GIRDER SHOWN, SOUTH SIDE SIMILAR

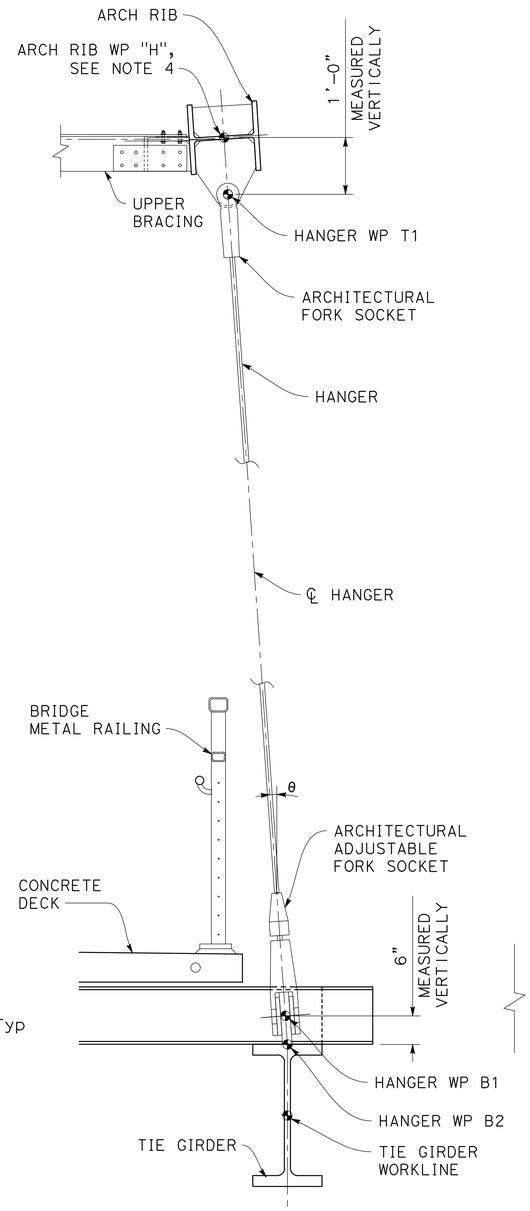

SECTION A-A

3/4" = 1'-0"

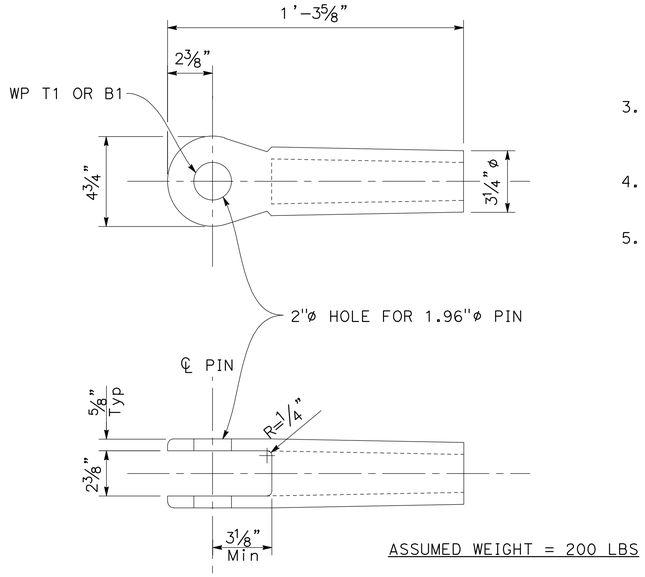

ASSUMED WEIGHT = 200 LBS

ASSUMED ANCHORAGE DIMENSION

3" = 1'-0"

NOTES:

1. Hangers must be ASTM A586 spiral strand Grade 1 with Class A zinc-coated inner wires and Class C weight outer wires, or approved equivalent. Hangers must have the following properties:
   - Nominal Diameter: 1" in
   - Approx. Metallic Area: 0.60 in^2
   - Minimum Breaking Load: 57.9 tons
   - Modulus of Elasticity: 23,000 ksi
   - Hanger Weight: 2.10 lb/ft
2. Hangers must be preassembled with the following end connections:
   - Tie Girder Anchorage: Adjustable architectural fork socket
   - Arch Rib Anchorage: Open architectural fork socket
3. End sockets to be designed and tested by the hanger supplier for the minimum breaking load of the hanger per project special provisions.
4. For coordinates of Arch Rib WP "H", see "ARCH RIB GEOMETRY AND LAYOUT" sheet.
5. Workpoint coordinates shown are based on the Reference State.

DRAFT - NOT FOR CONSTRUCTION

DESIGN OVERSIGHT	DESIGN	BY M. KLEYMANN	CHECKED X	PREPARED FOR THE STATE OF CALIFORNIA DEPARTMENT OF TRANSPORTATION	M. KLEYMANN, PROJECT ENGINEER
SIGN OFF DATE	DETAILS	BY J. VALENZUELA	CHECKED X		BRIDGE No. 36-XXXX; POST MILE X
	QUANTITIES	BY X	CHECKED X		APTOS CREEK PEDESTRIAN BRIDGE — HANGER GEOMETRY AND DETAILS

STRUCTURES DESIGN DETAIL SHEET (ENGLISH) (REVISION 8/16/2021)

DATE PLOTTED => 4/1/2025 TIME PLOTTED => 12:25 PM
FILE => 31_Aptos Creek PB_HGDT.dwg USERNAME => JVALENZUELA

ORIGINAL SCALE IN INCHES FOR REDUCED PLANS 0 1 2 3

PROJECT NUMBER & PHASE: 0518000116 COUNTY/ROUTE: SCR/1 CONTRACT No.: 05-0C734

DISREGARD PRINTS BEARING EARLIER REVISION DATES

REVISION DATES				SHEET	OF
				31	39

NOTES:

1. For definition of coordinate system, see "ARCH RIB GEOMETRY AND LAYOUT No. 1" sheet.
2. Hanger workpoints correspond to the bridge geometry in the Reference State condition as defined in the General notes. Fabricator must adjust accordingly for arch camber and any differences in temperature.
3. Hangers lengths provided correspond to workpoints T1 and B1.

Dist	COUNTY	ROUTE	POST MILES TOTAL PROJECT	SHEET No.	TOTAL SHEETS
5	SCR	1	8.1/10.7	----	931

REGISTERED CIVIL ENGINEER DATE

PLANS APPROVAL DATE

REGISTERED PROFESSIONAL ENGINEER — MATTHEW KLEYMANN — No. 91100 — Exp. 3/31/26 — CIVIL — STATE OF CALIFORNIA

THE STATE OF CALIFORNIA OR ITS OFFICERS OR AGENTS SHALL NOT BE RESPONSIBLE FOR THE ACCURACY OR COMPLETENESS OF SCANNED COPIES OF THIS PLAN SHEET.

SCCRTC
1523 PACIFIC AVE
SANTA CRUZ, CA 95060

MARK THOMAS
701 UNIVERSITY AVE, STE 200
SACRAMENTO, CA 95825

HANGER DATA

HANGER No.	UNSTRESSED LENGTH (ft)	LENGTH AT DL TENS (ft)	θ (degs)	DESIGN UNFACTORED LOAD (kips)			DESIGN FACTORED LOADS (kips)			
				DEAD LOAD	LIVE LOAD					
					MAX	MIN	SERVICE	STRENGTH	EXTREME	FATIGUE
H1N	12.020	12.035	4.369	20.025	14.888	-0.115	34.913	51.085	106.219	0.832
H2N	21.393	21.422	4.218	19.299	14.540	0.000	33.839	49.569	102.829	0.431
H3N	29.311	29.353	4.162	20.301	14.408	0.000	34.709	50.591	106.040	0.163
H4N	35.776	35.829	4.134	21.031	14.462	0.000	35.493	51.597	108.739	0.158
H5N	40.794	40.854	4.118	20.993	14.434	0.000	35.427	51.501	108.537	0.409
H6N	44.366	44.431	4.109	20.999	14.401	0.000	35.400	51.450	108.478	0.590
H7N	46.494	46.562	4.104	20.990	14.373	0.000	35.363	51.390	108.380	0.702
H8N	47.182	47.251	4.103	20.966	14.349	0.000	35.315	51.319	108.239	0.739
H9N	46.432	46.499	4.104	20.905	14.320	0.000	35.225	51.192	107.955	0.700
H10N	44.246	44.310	4.109	20.814	14.295	0.000	35.109	51.034	107.574	0.587
H11N	40.629	40.687	4.118	20.727	14.275	0.000	35.002	50.890	107.220	0.407
H12N	35.581	35.632	4.135	20.660	14.242	0.000	34.902	50.748	106.903	0.161
H13N	29.108	29.148	4.163	19.794	14.123	0.000	33.918	49.458	103.572	0.153
H14N	21.210	21.238	4.220	19.038	14.296	0.000	33.334	48.816	101.325	0.417
H15N	11.889	11.904	4.373	18.401	14.086	-0.120	32.487	47.652	98.579	0.759
H1S	12.020	12.035	-4.369	20.025	14.888	-0.115	34.913	51.085	106.219	0.832
H2S	21.393	21.422	-4.218	19.299	14.540	0.000	33.839	49.569	102.829	0.431
H3S	29.311	29.353	-4.162	20.301	14.408	0.000	34.709	50.591	106.040	0.163
H4S	35.776	35.829	-4.134	21.031	14.462	0.000	35.493	51.597	108.739	0.158
H5S	40.794	40.854	-4.118	20.993	14.434	0.000	35.427	51.501	108.537	0.409
H6S	44.366	44.431	-4.109	20.999	14.401	0.000	35.400	51.450	108.478	0.590
H7S	46.494	46.562	-4.104	20.990	14.373	0.000	35.363	51.390	108.380	0.702
H8S	47.182	47.251	-4.103	20.966	14.349	0.000	35.315	51.319	108.239	0.739
H9S	46.432	46.499	-4.104	20.905	14.320	0.000	35.225	51.192	107.955	0.700
H10S	44.246	44.310	-4.109	20.814	14.295	0.000	35.109	51.034	107.574	0.587
H11S	40.629	40.687	-4.118	20.727	14.275	0.000	35.002	50.890	107.220	0.407
H12S	35.581	35.632	-4.135	20.660	14.242	0.000	34.902	50.748	106.903	0.161
H13S	29.108	29.148	-4.163	19.794	14.123	0.000	33.918	49.458	103.572	0.153
H14S	21.210	21.238	-4.220	19.038	14.296	0.000	33.334	48.816	101.325	0.417
H15S	11.889	11.904	-4.373	18.401	14.086	-0.120	32.487	47.652	98.579	0.759

HANGER WORKPOINT COORDINATES

WP T1			WP B1			WP B2		
X	Y	Z	X	Y	Z	X	Y	Z
24.000	-8.878	13.942	24.000	-9.795	1.942	24.000	-9.833	1.442
42.000	-8.221	23.450	42.000	-9.797	2.086	42.000	-9.833	1.586
60.000	-7.666	31.504	60.000	-9.797	2.230	60.000	-9.833	1.730
78.000	-7.214	38.109	78.000	-9.797	2.374	78.000	-9.833	1.874
96.000	-6.863	43.265	96.000	-9.797	2.518	96.000	-9.833	2.018
114.000	-6.614	46.978	114.000	-9.798	2.662	114.000	-9.833	2.162
132.000	-6.465	49.248	132.000	-9.798	2.806	132.000	-9.833	2.306
150.000	-6.417	50.079	150.000	-9.798	2.950	150.000	-9.833	2.450
168.000	-6.469	49.473	168.000	-9.798	3.094	168.000	-9.833	2.594
186.000	-6.622	47.434	186.000	-9.798	3.238	186.000	-9.833	2.738
204.000	-6.875	43.964	204.000	-9.797	3.382	204.000	-9.833	2.882
222.000	-7.228	39.066	222.000	-9.797	3.526	222.000	-9.833	3.026
240.000	-7.681	32.741	240.000	-9.797	3.670	240.000	-9.833	3.170
258.000	-8.234	24.994	258.000	-9.797	3.814	258.000	-9.833	3.314
276.000	-8.887	15.827	276.000	-9.795	3.958	276.000	-9.833	3.458
24.000	8.878	13.942	24.000	9.795	1.942	24.000	9.833	1.442
42.000	8.221	23.450	42.000	9.797	2.086	42.000	9.833	1.586
60.000	7.666	31.504	60.000	9.797	2.230	60.000	9.833	1.730
78.000	7.214	38.109	78.000	9.797	2.374	78.000	9.833	1.874
96.000	6.863	43.265	96.000	9.797	2.518	96.000	9.833	2.018
114.000	6.614	46.978	114.000	9.798	2.662	114.000	9.833	2.162
132.000	6.465	49.248	132.000	9.798	2.806	132.000	9.833	2.306
150.000	6.417	50.079	150.000	9.798	2.950	150.000	9.833	2.450
168.000	6.469	49.473	168.000	9.798	3.094	168.000	9.833	2.594
186.000	6.622	47.434	186.000	9.798	3.238	186.000	9.833	2.738
204.000	6.875	43.964	204.000	9.797	3.382	204.000	9.833	2.882
222.000	7.228	39.066	222.000	9.797	3.526	222.000	9.833	3.026
240.000	7.681	32.741	240.000	9.797	3.670	240.000	9.833	3.170
258.000	8.234	24.994	258.000	9.797	3.814	258.000	9.833	3.314
276.000	8.887	15.827	276.000	9.795	3.958	276.000	9.833	3.458

DRAFT - NOT FOR CONSTRUCTION

DESIGN OVERSIGHT

SIGN OFF DATE

	BY	CHECKED
DESIGN	M. KLEYMANN	X
DETAILS	J. VALENZUELA	X
QUANTITIES	X	X

PREPARED FOR THE STATE OF CALIFORNIA DEPARTMENT OF TRANSPORTATION

M. KLEYMANN
PROJECT ENGINEER

BRIDGE No. 36-XXXX
POST MILE X

APTOS CREEK PEDESTRIAN BRIDGE

HANGER DATA

STRUCTURES DESIGN DETAIL SHEET (ENGLISH) (REVISION 8/16/2021)

DATE PLOTTED => 4/1/2025 TIME PLOTTED => 12:25 PM
FILE => 32_Aptos Creek PB_HGD.dwg USERNAME => JVALENZUELA

ORIGINAL SCALE IN INCHES FOR REDUCED PLANS 0 1 2 3

PROJECT NUMBER & PHASE:0518000116 COUNTY/ROUTE:SCR/1 CONTRACT No.:05-0C734

DISREGARD PRINTS BEARING EARLIER REVISION DATES

REVISION DATES					SHEET	OF
					32	39

Dist	COUNTY	ROUTE	POST MILES TOTAL PROJECT	SHEET No.	TOTAL SHEETS
5	SCR	1	8.1/10.7	----	931

REGISTERED CIVIL ENGINEER DATE

PLANS APPROVAL DATE

REGISTERED PROFESSIONAL ENGINEER — MATTHEW KLEYMANN — No. 91100 — Exp. 3/31/26 — CIVIL — STATE OF CALIFORNIA

THE STATE OF CALIFORNIA OR ITS OFFICERS OR AGENTS SHALL NOT BE RESPONSIBLE FOR THE ACCURACY OR COMPLETENESS OF SCANNED COPIES OF THIS PLAN SHEET.

SCCRTC
1523 PACIFIC AVE
SANTA CRUZ, CA 95060

MARK THOMAS
701 UNIVERSITY AVE, STE 200
SACRAMENTO, CA 95825

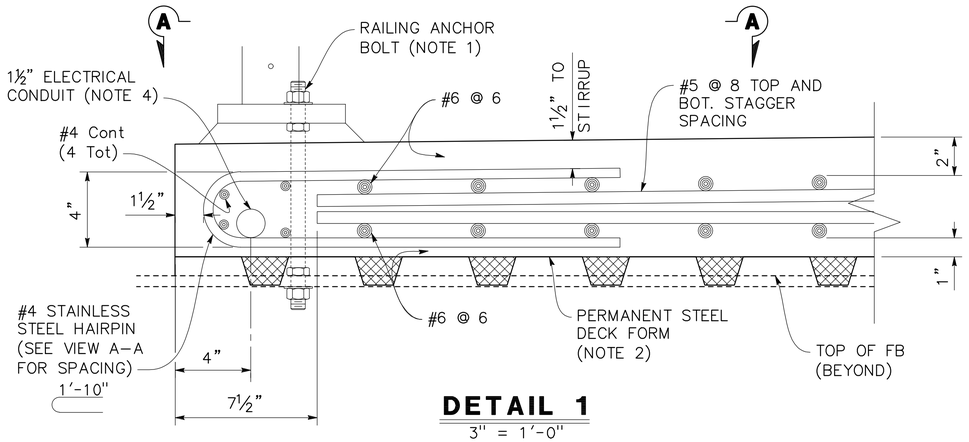

DETAIL 1
3" = 1'-0"

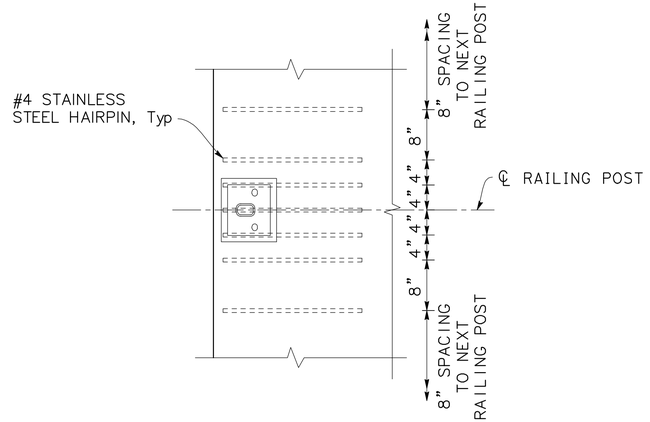

VIEW A-A
1" = 1'-0"

Typ Longit AND TRANSVERSE DECK REINFORCEMENT NOT SHOWN

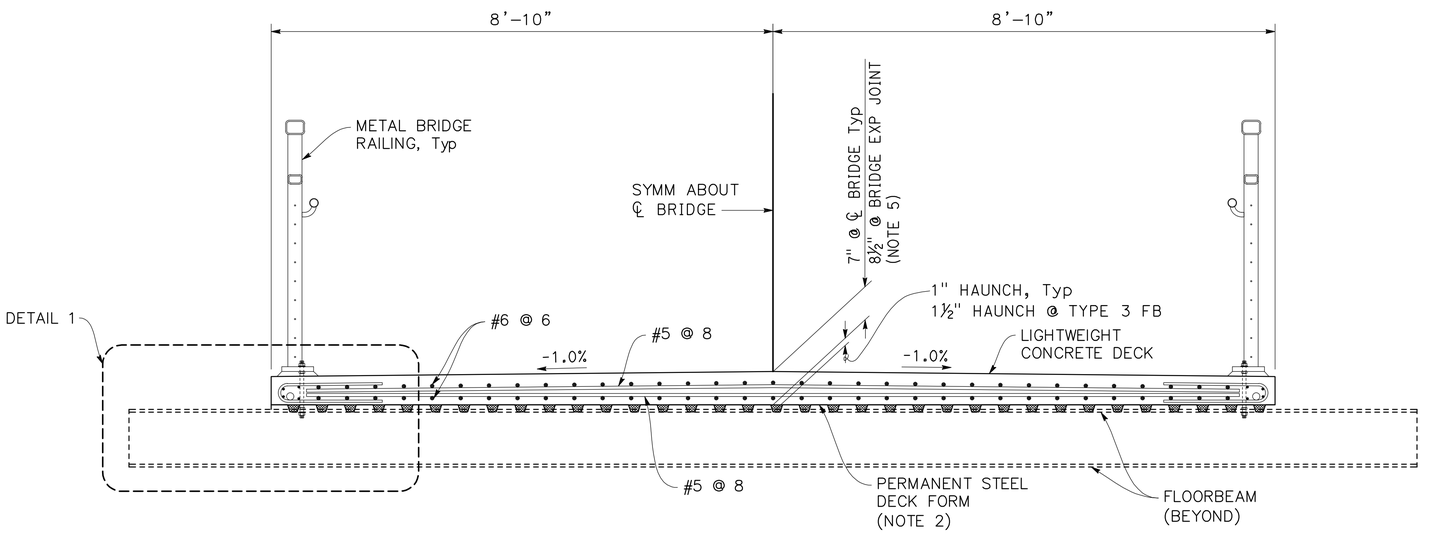

TYPICAL DECK SECTION
3/4" = 1'-0"

NOTES:

1. For details of railing anchor bolts, see "METAL BRIDGE RAILING DETAILS" sheets.
2. Permanent steel deck forms shall be designed by Contractor in accordance with Caltrans Standard Specification. Troughs of the forms shall be filled with EPS Foam complying with the following requirements.
   - 2.1. Use polystyrene foam comprised of expanded polystyrene manufactured from virgin resin of sufficient density to support the weight of concrete without deformation.
   - 2.2. Extrude the polystyrene foam to match the geometry of the troughs and provide a snug fit.
   - 2.3. Use polystyrene foam that has a density of not less than 0.8 lbs/cubic foot.
   - 2.4. Use polystyrene foam that has water absorption of less than 2.6% when tested according to ASTM C272.
   - 2.5. Total weight of the steel deck forms and foams shall not exceed 3.5 psf.
3. Deck Reinforcement shall have minimum separation of ½" to any galvanized surfaces such as floorbeam shear studs or railing anchor bolts. Where contact cannot be avoid, cover the reinforcement locally with three wraps of electrical tape.
4. For conduit details, see "ELECTRICAL PLANS".
5. For Deck details and additional reinforcement at bridge expansion joints, see "EXPANSION JOINT DETAILS" sheet.

DRAFT - NOT FOR CONSTRUCTION

DESIGN OVERSIGHT

SIGN OFF DATE

	BY	CHECKED
DESIGN	M. KLEYMANN	X
DETAILS	J. VALENZUELA	X
QUANTITIES	X	X

PREPARED FOR THE STATE OF CALIFORNIA DEPARTMENT OF TRANSPORTATION

M. KLEYMANN
PROJECT ENGINEER

BRIDGE No. 36-XXXX
POST MILE X

APTOS CREEK PEDESTRIAN BRIDGE
CONCRETE DECK DETAILS No. 1

STRUCTURES DESIGN DETAIL SHEET (ENGLISH) (REVISION 8/16/2021)

DATE PLOTTED => 4/1/2025 TIME PLOTTED => 12:26 PM
FILE => 33_Aptos Creek PB_CDDT1.dwg USERNAME => JVALENZUELA

ORIGINAL SCALE IN INCHES FOR REDUCED PLANS 0 1 2 3

PROJECT NUMBER & PHASE: 0518000116
COUNTY/ROUTE: SCR/1
CONTRACT No.: 05-0C734

DISREGARD PRINTS BEARING EARLIER REVISION DATES

REVISION DATES					SHEET	OF
					33	39

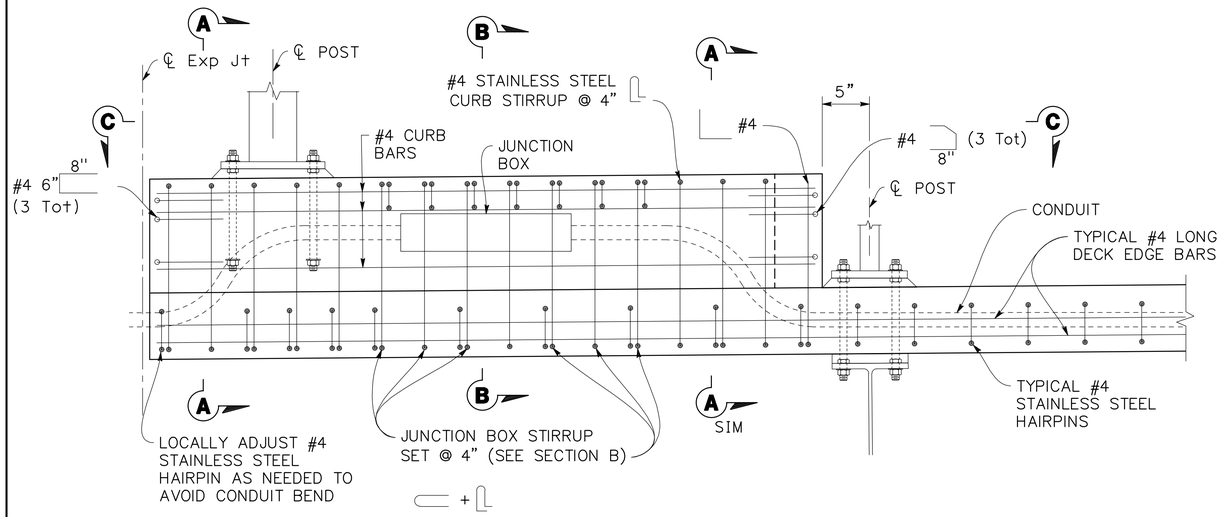

DECK ELEVATION AT END CURB

1 1/2" = 1'-0"

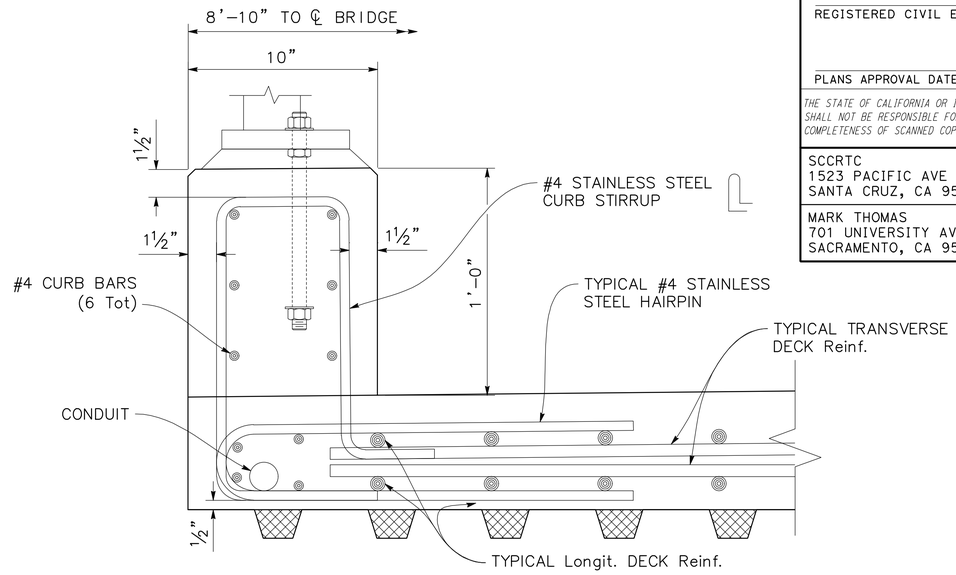

SECTION A-A

3" = 1'-0"

Dist	COUNTY	ROUTE	POST MILES TOTAL PROJECT	SHEET No.	TOTAL SHEETS
5	SCR	1	8.1/10.7	----	931

REGISTERED CIVIL ENGINEER DATE

PLANS APPROVAL DATE

REGISTERED PROFESSIONAL ENGINEER — MATTHEW KLEYMANN — No. 91100 — Exp. 3/31/26 — CIVIL — STATE OF CALIFORNIA

THE STATE OF CALIFORNIA OR ITS OFFICERS OR AGENTS SHALL NOT BE RESPONSIBLE FOR THE ACCURACY OR COMPLETENESS OF SCANNED COPIES OF THIS PLAN SHEET.

SCCRTC
1523 PACIFIC AVE
SANTA CRUZ, CA 95060

MARK THOMAS
701 UNIVERSITY AVE, STE 200
SACRAMENTO, CA 95825

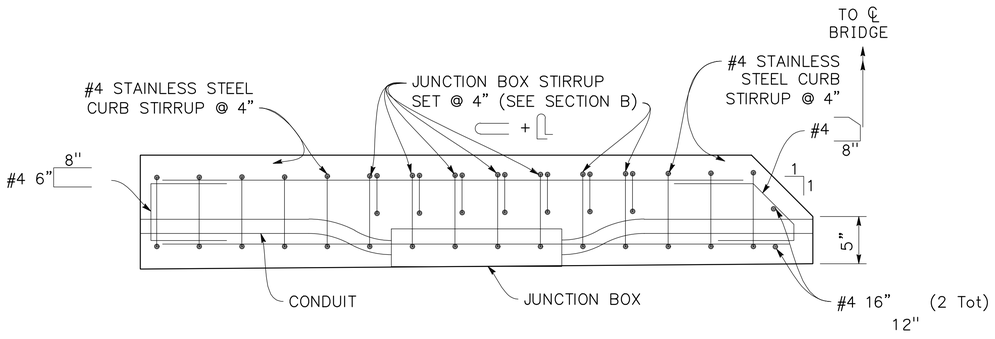

VIEW C-C

1 1/2" = 1'-0"

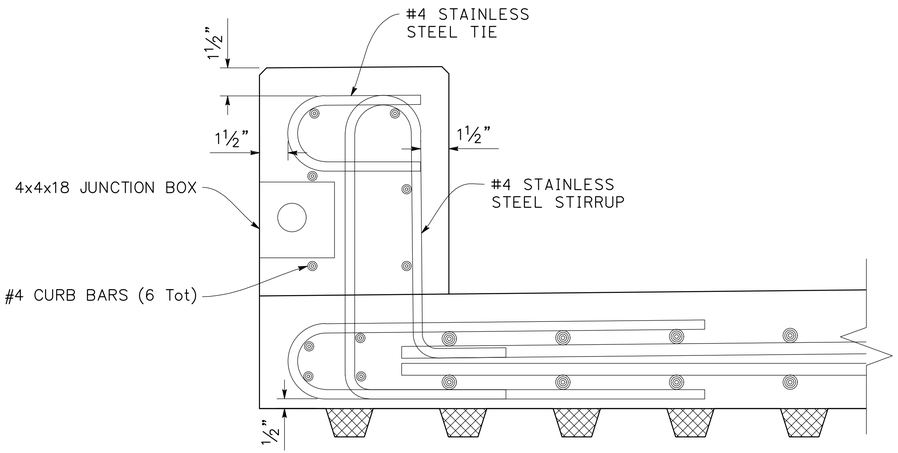

SECTION B-B

3" = 1'-0"

DRAFT - NOT FOR CONSTRUCTION

DESIGN OVERSIGHT

SIGN OFF DATE

	BY	CHECKED
DESIGN	M. KLEYMANN	X
DETAILS	J. VALENZUELA	X
QUANTITIES	X	X

PREPARED FOR THE
STATE OF CALIFORNIA
DEPARTMENT OF TRANSPORTATION

M. KLEYMANN
PROJECT ENGINEER

BRIDGE No. 36-XXXX
POST MILE X

APTOS CREEK PEDESTRIAN BRIDGE

CONCRETE DECK DETAILS No. 2

STRUCTURES DESIGN DETAIL SHEET
(ENGLISH) (REVISION 8/16/2021)

DATE PLOTTED => 4/1/2025 TIME PLOTTED => 12:26 PM
FILE => 34_Aptos Creek PB_CDDT2.dwg USERNAME => JVALENZUELA

ORIGINAL SCALE IN INCHES FOR REDUCED PLANS 0 1 2 3

PROJECT NUMBER & PHASE: 0518000116

COUNTY/ROUTE: SCR/1
CONTRACT No.: 05-0C734

DISREGARD PRINTS BEARING EARLIER REVISION DATES →

REVISION DATES					SHEET	OF
					34	39

Dist	COUNTY	ROUTE	POST MILES TOTAL PROJECT	SHEET No.	TOTAL SHEETS
5	SCR	1	8.1/10.7	826	931

REGISTERED CIVIL ENGINEER DATE

PLANS APPROVAL DATE

REGISTERED PROFESSIONAL ENGINEER
MATTHEW KLEYMANN
No. 91100
Exp. 3/31/26
CIVIL
STATE OF CALIFORNIA

THE STATE OF CALIFORNIA OR ITS OFFICERS OR AGENTS SHALL NOT BE RESPONSIBLE FOR THE ACCURACY OR COMPLETENESS OF SCANNED COPIES OF THIS PLAN SHEET.

SCCRTC
1523 PACIFIC AVE
SANTA CRUZ, CA 95060

MARK THOMAS
701 UNIVERSITY AVE, STE 200
SACRAMENTO, CA 95825

SHEET PLACEHOLDER

DRAFT - NOT FOR CONSTRUCTION

DESIGN OVERSIGHT

SIGN OFF DATE

	BY	CHECKED
DESIGN	M. KLEYMANN	X
DETAILS	J. VALENZUELA	X
QUANTITIES	X	X

PREPARED FOR THE STATE OF CALIFORNIA DEPARTMENT OF TRANSPORTATION

M. KLEYMANN
PROJECT ENGINEER

BRIDGE No. 36-XXXX
POST MILE X

APTOS CREEK PEDESTRIAN BRIDGE

CONCRETE DECK REINFORCEMENT

STRUCTURES DESIGN DETAIL SHEET (ENGLISH) (REVISION 8/16/2021)

DATE PLOTTED => 4/1/2025 TIME PLOTTED => 12:26 PM
FILE => 35_Aptos Creek PB_CDR.dwg USERNAME => JVALENZUELA

ORIGINAL SCALE IN INCHES FOR REDUCED PLANS 0 1 2 3

PROJECT NUMBER & PHASE:0518000116 COUNTY/ROUTE:SCR/1 CONTRACT No.:05-0C734

DISREGARD PRINTS BEARING EARLIER REVISION DATES

REVISION DATES				SHEET	OF
				35	39

Dist	COUNTY	ROUTE	POST MILES TOTAL PROJECT	SHEET No.	TOTAL SHEETS
5	SCR	1	8.1/10.7	827	931

REGISTERED CIVIL ENGINEER DATE

PLANS APPROVAL DATE

REGISTERED PROFESSIONAL ENGINEER — MATTHEW KLEYMANN — No. 91100 — Exp. 3/31/26 — CIVIL — STATE OF CALIFORNIA

THE STATE OF CALIFORNIA OR ITS OFFICERS OR AGENTS SHALL NOT BE RESPONSIBLE FOR THE ACCURACY OR COMPLETENESS OF SCANNED COPIES OF THIS PLAN SHEET.

SCCRTC
1523 PACIFIC AVE
SANTA CRUZ, CA 95060

MARK THOMAS
701 UNIVERSITY AVE, STE 200
SACRAMENTO, CA 95825

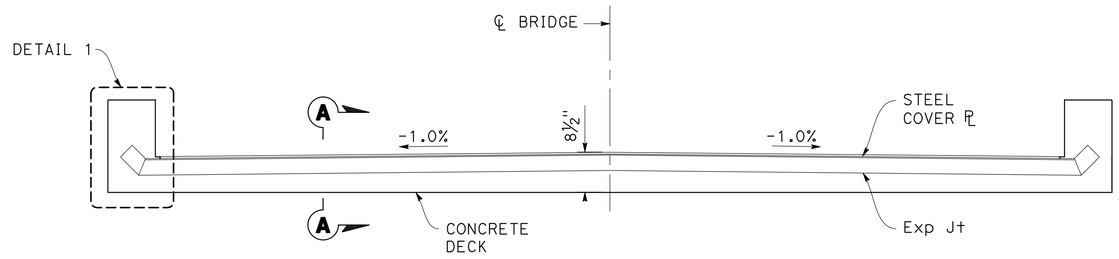

TYPICAL SECTION AT EXPANSION JOINT

3/4" = 1'-0"

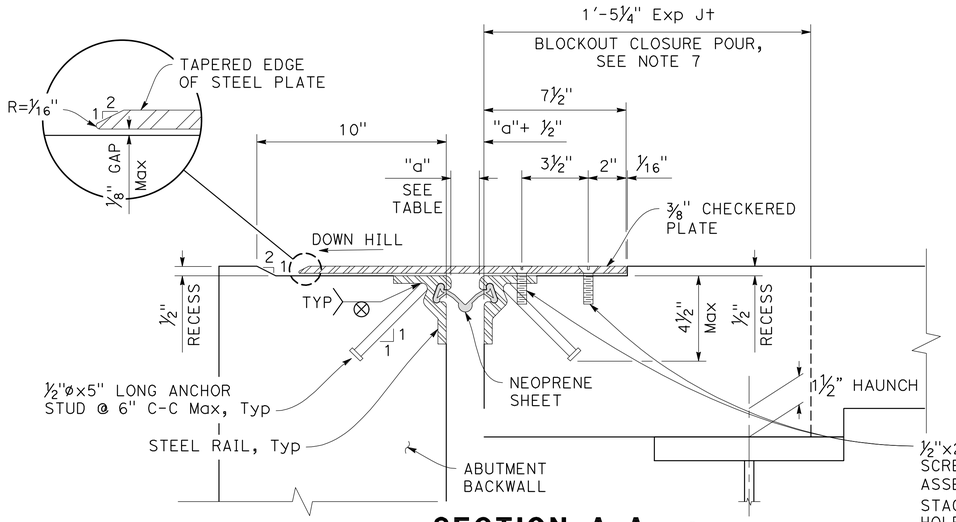

SECTION A-A

3" = 1'-0"

LOCATION	MOVEMENT RANGE (MR)	SKEW	OPENING "a"		SETTING OPENING FOR "a" (SEE NOTE 7)		
			MIN	MAX	50°F	70°F	85°F
ABUTMENT 1	4"	0°					
ABUTMENT 2	1"	0°					

* Note that minimum gap opening for installation is 1½".

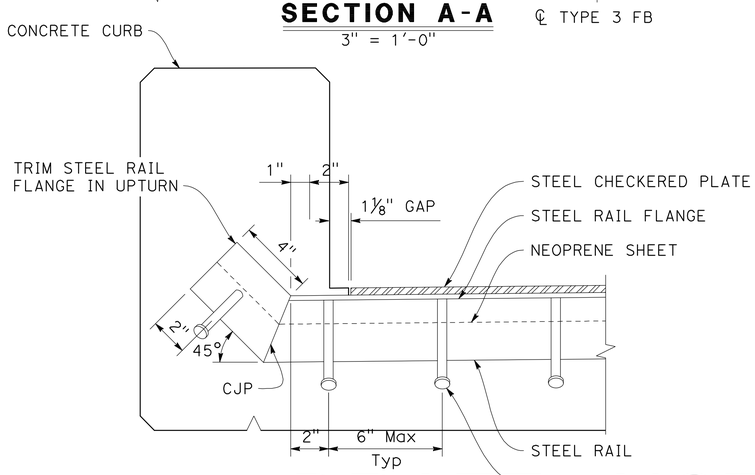

DETAIL 1

3" = 1'-0"

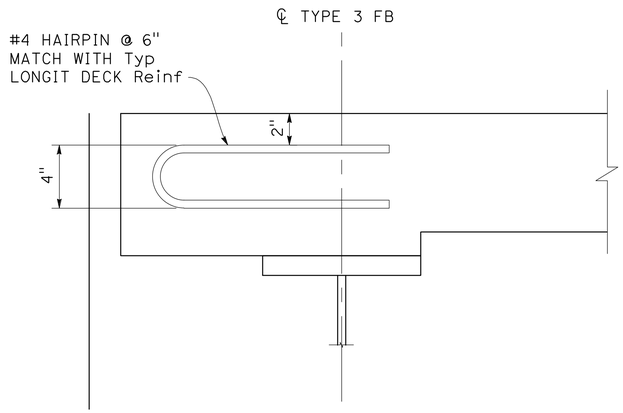

ADDITIONAL DECK REINFORCEMENT AT EXP JOINT

(TYPICAL DECK REINFORCEMENT NOT SHOWN FOR CLARITY)

2½" = 1'-0"

NOTES:

1. Expansion joints to be Watson Bowman Wabo Stripseal with "Type M" steel rail and SE-400 elastomeric seal, or approved equivalent.
2. All plates, studs, fasteners and inserts must be hot dipped galvanized. Galvanize steel rail and studs after fabrication. Touch up galvanizing at weld locations.
3. Steel checkered plate and steel rails must conform with ASTM A36 or ASTM A588. Anchor studs to comply with ASTM A108
4. Field or shop welds may be used in steel rail to achieve geometry. Where used splices must be complete joint penetration welds with the top surface ground smooth.
5. Provide holes in steel checkered plate such that flat head cap screws sit flush (tolerance +0/-⅛").
6. Neoprene sheet must be fabricated in one continuous piece. Field splices of the neoprene are not allowed.
7. Set expansion joints after completion of concrete deck, curbs, railings and abutment backfill. Expansion joint setting dimensions are to be linearly interpolated for temperatures between those shown in the table.

DRAFT - NOT FOR CONSTRUCTION

DESIGN OVERSIGHT

SIGN OFF DATE

	BY	CHECKED
DESIGN	M. KLEYMANN	X
DETAILS	J. VALENZUELA	X
QUANTITIES	X	X

PREPARED FOR THE STATE OF CALIFORNIA DEPARTMENT OF TRANSPORTATION

M. KLEYMANN
PROJECT ENGINEER

BRIDGE No. 36-XXXX
POST MILE X

APTOS CREEK PEDESTRIAN BRIDGE

EXPANSION JOINT DETAILS

STRUCTURES DESIGN DETAIL SHEET (ENGLISH) (REVISION 8/16/2021)

DATE PLOTTED => 4/1/2025
FILE => 36_Aptos Creek PB_EXJT.dwg
TIME PLOTTED => 12:26 PM
USERNAME => JVALENZUELA
ORIGINAL SCALE IN INCHES FOR REDUCED PLANS 0 1 2 3

PROJECT NUMBER & PHASE:0518000116
COUNTY/ROUTE: SCR/1
CONTRACT No.: 05-0C734

DISREGARD PRINTS BEARING EARLIER REVISION DATES

REVISION DATES	SHEET	OF
	36	39

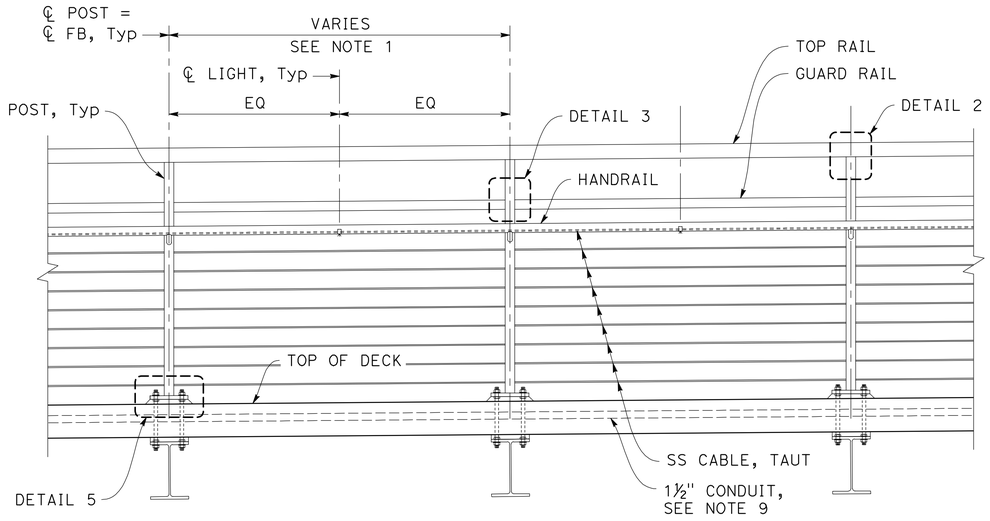

TYPICAL ELEVATION
3/4" = 1'-0"

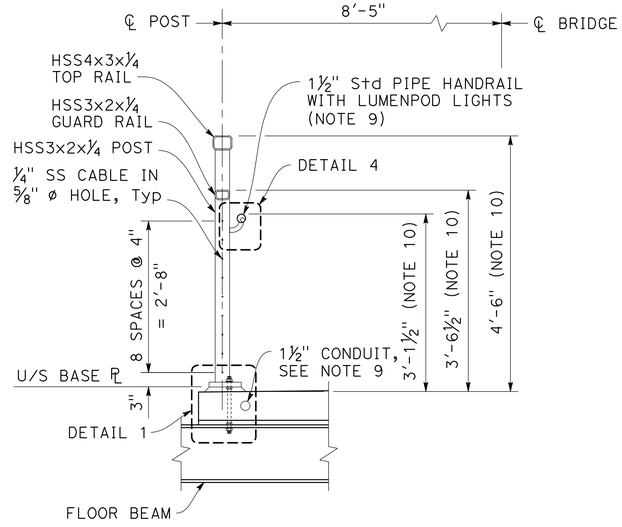

TYPICAL SECTION
3/4" = 1'-0"

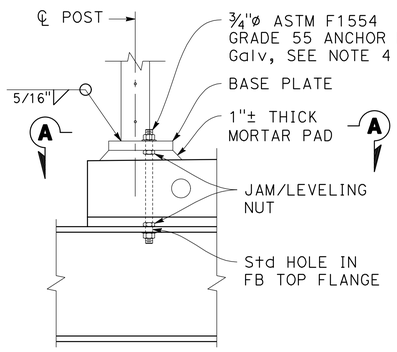

DETAIL 1
1 1/2" = 1'-0"

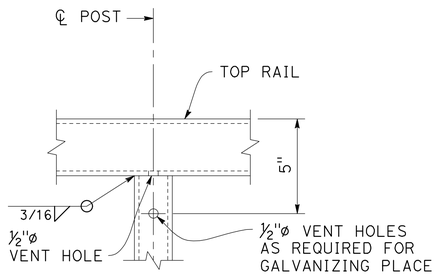

DETAIL 2
3" = 1'-0"

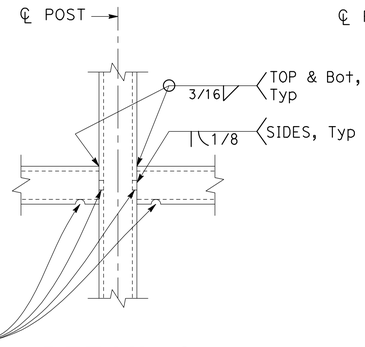

DETAIL 3
3" = 1'-0"

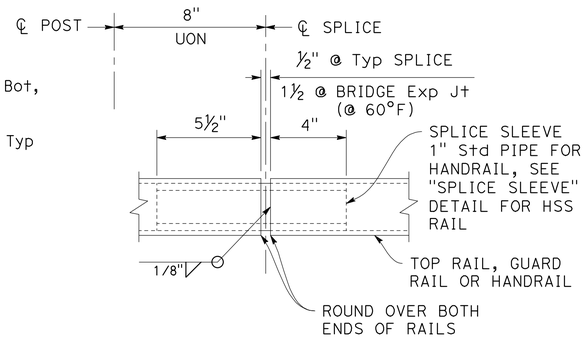

TYPICAL RAIL SPLICE DETAIL
3" = 1'-0"

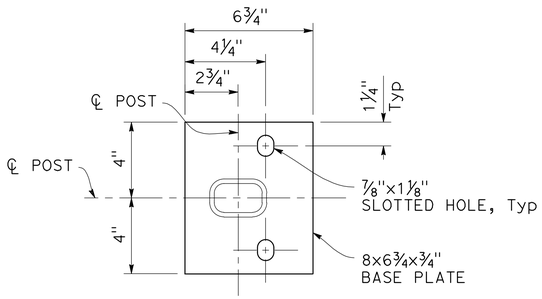

SECTION A-A
3" = 1'-0"

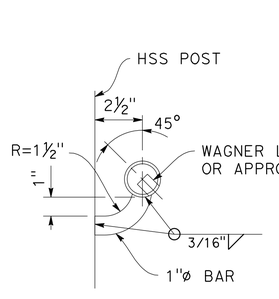

DETAIL 4
3" = 1'-0"

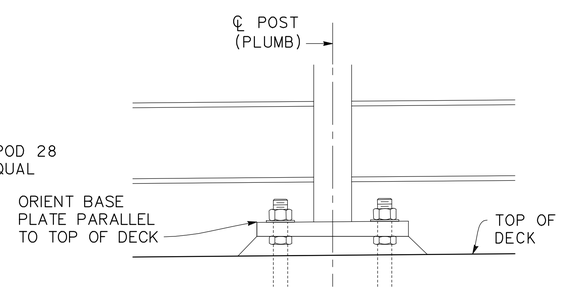

DETAIL 5
3" = 1'-0"

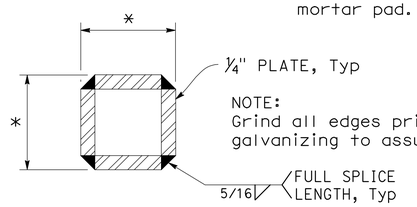

* The difference between the out-to-out rail splice sleeve dimensions and the clear inside dimensions of the tubular steel rail elements must not exceed 3/16" after galvanizing

** HSS sections or ¼" bent plate(s) may be used as alternative to section shown provided the out-to-out dimensions comply with the note above.

SPLICE SLEEVE
NO SCALE

Dist	COUNTY	ROUTE	POST MILES TOTAL PROJECT	SHEET No.	TOTAL SHEETS
5	SCR	1	8.1/10.7	828	931

REGISTERED CIVIL ENGINEER — DATE

PLANS APPROVAL DATE

REGISTERED PROFESSIONAL ENGINEER — MATTHEW KLEYMANN — No. 91100 — Exp. 3/31/26 — CIVIL — STATE OF CALIFORNIA

THE STATE OF CALIFORNIA OR ITS OFFICERS OR AGENTS SHALL NOT BE RESPONSIBLE FOR THE ACCURACY OR COMPLETENESS OF SCANNED COPIES OF THIS PLAN SHEET.

SCCRTC
1523 PACIFIC AVE
SANTA CRUZ, CA 95060

MARK THOMAS
701 UNIVERSITY AVE, STE 200
SACRAMENTO, CA 95825

NOTES:

1. Align centerline of posts with centerline of each floor beam. For floor beam spacing, see "DECK FRAMING PLAN" sheet. Posts are to plumb/vertical in both directions.
2. All components of the metal bridge railings must be hot dipped galvanized and finished with Natina stain.
3. Bottom surface of base plates to be coated with an approved coating system suitable for application on galvanized steel to prevent contact between the zinc and grout. The color must be medium gray.
4. Anchor rods to be tightened 1/2 turn of the nut past the "snug-tight" condition.
5. All HSS members to comply with ASTM A500/A500M, Grade B. All other steel to comply with ASTM A36/A36M.
6. Provide expansion joints in top rail, guard rail and hand rail at intervals of no less than 15'-0" and no more than 24'-0".
7. Orient tube seams to be on outside face of railing (i.e. not facing trail).
8. For cable turnbuckle details, see "METAL BRIDGE RAILING DETAILS No. 3" sheet.
9. See "ELECTRICAL PLANS" for details not shown.
10. Dimensions provided are measured vertically at centerline of post with a 1" nominal mortar pad.

DRAFT - NOT FOR CONSTRUCTION

DESIGN OVERSIGHT

SIGN OFF DATE

	BY	CHECKED
DESIGN	M. KLEYMANN	X
DETAILS	J. VALENZUELA	X
QUANTITIES	X	X

PREPARED FOR THE STATE OF CALIFORNIA DEPARTMENT OF TRANSPORTATION

M. KLEYMANN
PROJECT ENGINEER

BRIDGE No. 36-XXXX
POST MILE X

APTOS CREEK PEDESTRIAN BRIDGE
METAL BRIDGE RAILING DETAILS No. 1

STRUCTURES DESIGN DETAIL SHEET (ENGLISH) (REVISION 8/16/2021)

DATE PLOTTED => 4/1/2025 TIME PLOTTED => 12:27 PM
FILE => 37_Aptos Creek PB_RDT1.dwg USERNAME => JVALENZUELA

ORIGINAL SCALE IN INCHES FOR REDUCED PLANS 0 1 2 3

PROJECT NUMBER & PHASE:0518000116 COUNTY/ROUTE: SCR/1 CONTRACT No.: 05-0C734

DISREGARD PRINTS BEARING EARLIER REVISION DATES →

REVISION DATES

SHEET 37 OF 39

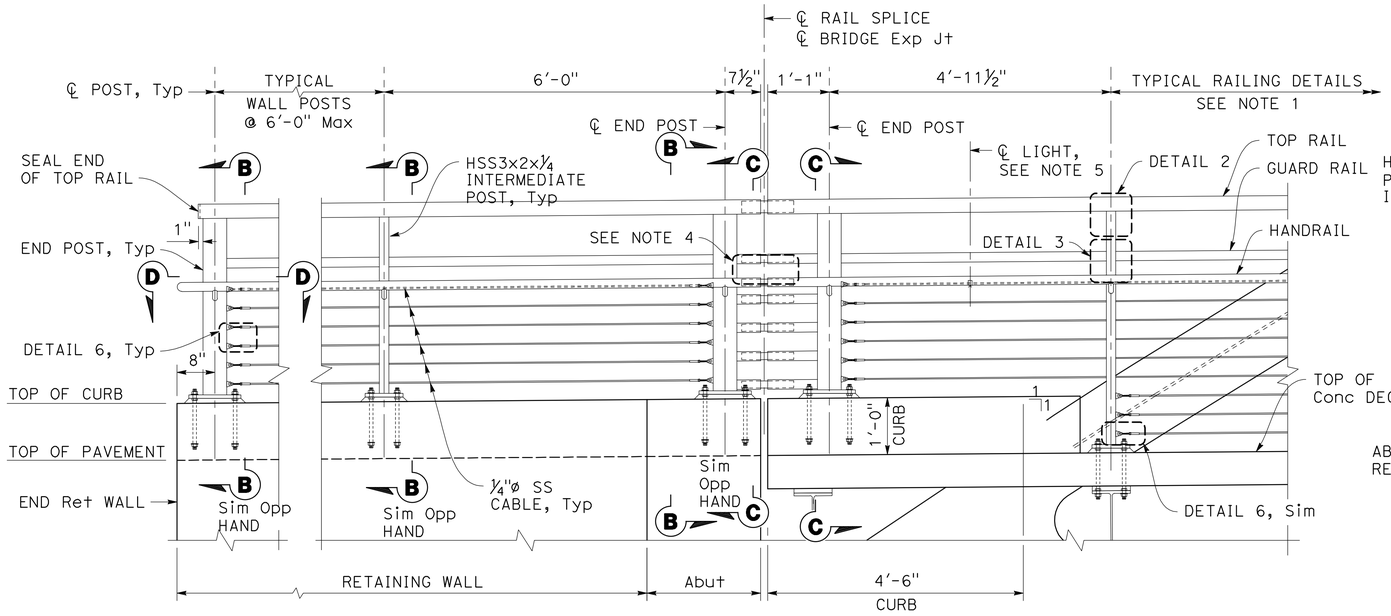

RAILING ELEVATION AT EXPANSION JOINT RETAINING WALL SIDE

3/4" = 1'-0"

(Inside elevation looking from bridge deck North side of Abutment 2 shown, North side Abutment 1 similar, opposite hand)

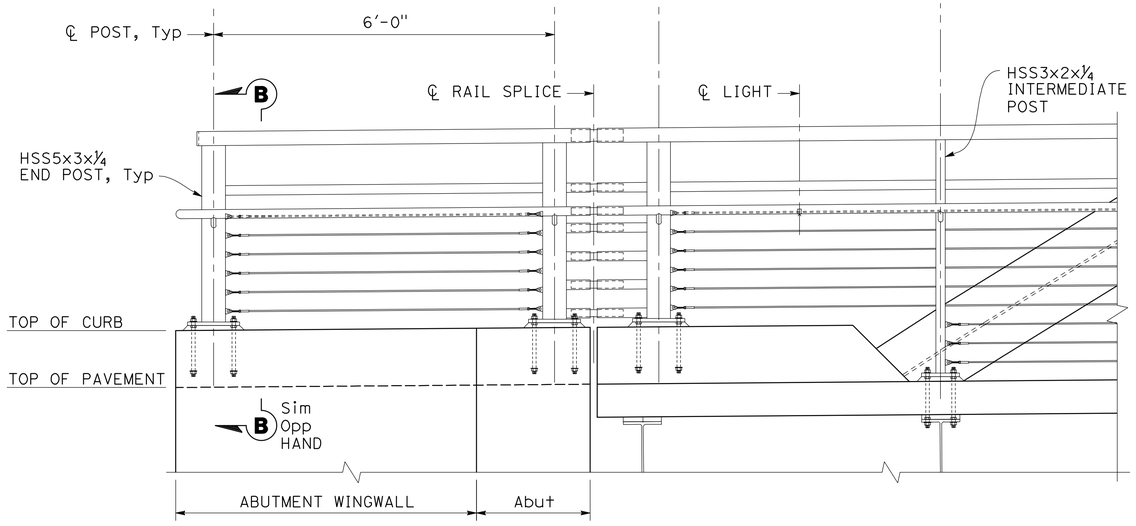

RAILING ELEVATION AT EXPANSION JOINT WINGWALL SIDE

3/4" = 1'-0"

(Inside elevation looking from bridge deck South side of Abutment 1 shown, South side Abutment 2 similar, opposite hand)

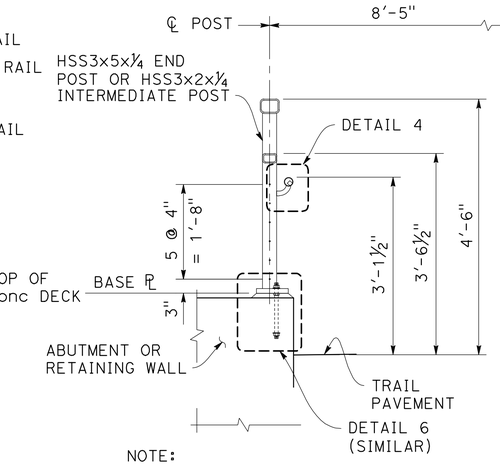

NOTE:
For details not shown, see TYPICAL SECTION on "METAL BRIDGE RAILING DETAILS No. 1" sheet.

SECTION B-B

3/4" = 1'-0"

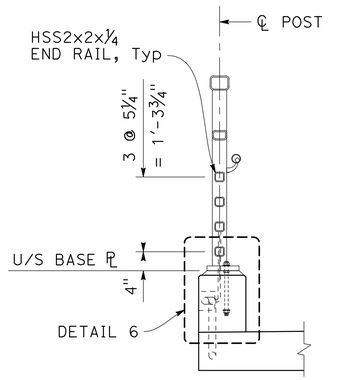

NOTE:
For details not shown, see SECTION B-B.

SECTION C-C

3/4" = 1'-0"

NOTES:

1. For typical metal bridge railing notes and details, see "METAL BRIDGE RAILING DETAILS No. 1" sheet.
2. For DETAILS 2, 3 and 4, see "METAL RAILING DETAILS No. 1" sheet.
3. For DETAILS 6, 7, 8, and SECTION D-D, see "METAL BRIDGE RAILING DETAILS No. 3" sheet.
4. For railing splice details, see TYPICAL RAIL SPLICE DETAIL on "METAL RAILING DETAILS No. 1" sheet.
5. Handrail lighting is only within limits of the bridge. Omit hand rail lights for railing on retaining wall and wingwall.
6. For additional details on conduit at junction box, see "TYPICAL DECK DETAILS No. 2" sheet.

Dist	COUNTY	ROUTE	POST MILES TOTAL PROJECT	SHEET No.	TOTAL SHEETS
5	SCR	1	8.1/10.7	829	931

REGISTERED CIVIL ENGINEER DATE

PLANS APPROVAL DATE

REGISTERED PROFESSIONAL ENGINEER — MATTHEW KLEYMANN — No. 91100 — Exp. 3/31/26 — CIVIL — STATE OF CALIFORNIA

THE STATE OF CALIFORNIA OR ITS OFFICERS OR AGENTS SHALL NOT BE RESPONSIBLE FOR THE ACCURACY OR COMPLETENESS OF SCANNED COPIES OF THIS PLAN SHEET.

SCCRTC
1523 PACIFIC AVE
SANTA CRUZ, CA 95060

MARK THOMAS
701 UNIVERSITY AVE, STE 200
SACRAMENTO, CA 95825

DRAFT - NOT FOR CONSTRUCTION

DESIGN OVERSIGHT

SIGN OFF DATE

	BY	CHECKED
DESIGN	M. KLEYMANN	X
DETAILS	J. VALENZUELA	X
QUANTITIES	X	X

PREPARED FOR THE STATE OF CALIFORNIA DEPARTMENT OF TRANSPORTATION

M. KLEYMANN
PROJECT ENGINEER

BRIDGE No. 36-XXXX
POST MILE X

APTOS CREEK PEDESTRIAN BRIDGE

METAL BRIDGE RAILING DETAILS No. 2

STRUCTURES DESIGN DETAIL SHEET (ENGLISH) (REVISION 8/16/2021)

DATE PLOTTED => 4/1/2025
FILE => 38_Aptos Creek PB_RDT2.dwg

TIME PLOTTED => 12:27 PM
USERNAME => JVALENZUELA

ORIGINAL SCALE IN INCHES FOR REDUCED PLANS 0 1 2 3

PROJECT NUMBER & PHASE:0518000116

COUNTY/ROUTE: SCR/1
CONTRACT No.: 05-0C734

DISREGARD PRINTS BEARING EARLIER REVISION DATES →

REVISION DATES

SHEET 38 OF 39

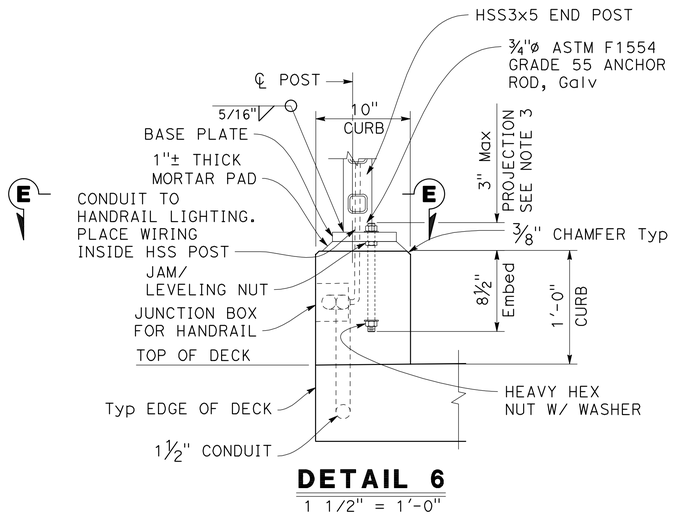

DETAIL 6

1 1/2" = 1'-0"

End posts on deck side shown, end posts on abutment/retaining wall side similar

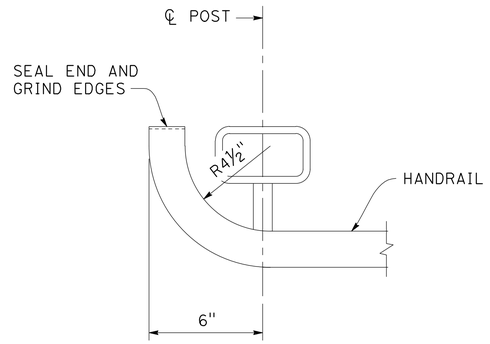

SECTION D-D

3" = 1'-0"

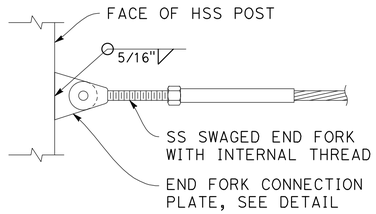

DETAIL 7

6" = 1'-0"

NOTES:

1. See "METAL BRIDGE RAILING DETAILS No. 1" sheet for typical notes.
2. For location of section and details, see "METAL BRIDGE RAILING DETAILS No. 2" sheet.
3. Anchor rods to be tightened ½ turn of nut past the "snug-tight" condition. Both ends of anchor rod must have at least one thread pitch extend beyond top surface of the nut.
4. Cables must be spliced with turnbuckles spaced no more than 200 ft and not less than 50ft. Turnbuckle must have minimum 1½" of adjustment and a minimum breaking load of 3500 lbs.
5. Submit cable product and fittings to Engineer for review and approval. End fork connection plate dimensions to be adjusted to suit selected end fork product. Provide final dimensions when submitting fitting details.

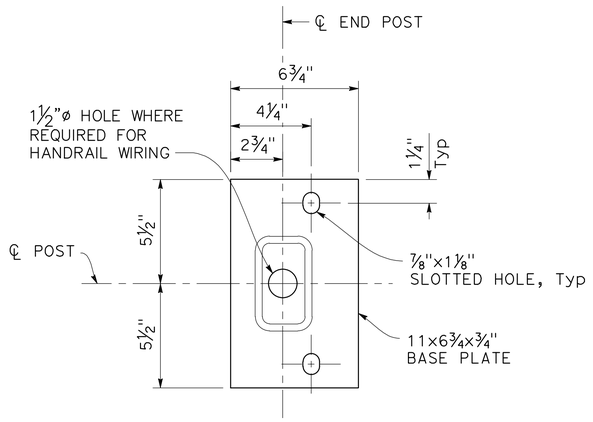

SECTION E-E

3" = 1'-0"

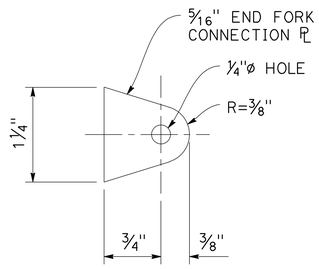

END FORK CONNECTION PLATE DETAIL

NO SCALE

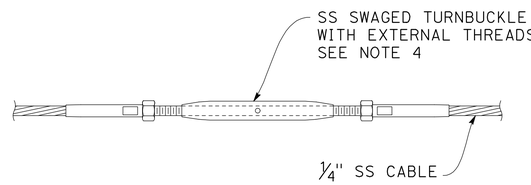

TYPICAL TURNBUCKLE DETAIL

NO SCALE

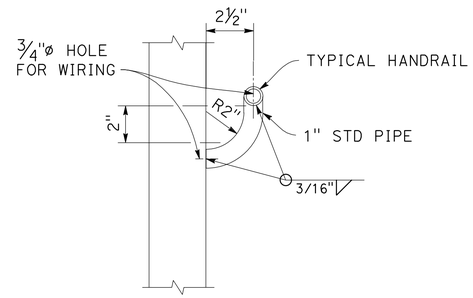

DETAIL 8

HANDRAIL CONNECTION AT END POST

3" = 1'-0"

At locations for feeding handrail lighting

DRAFT - NOT FOR CONSTRUCTION

Dist	COUNTY	ROUTE	POST MILES TOTAL PROJECT	SHEET No.	TOTAL SHEETS
5	SCR	1	8.1/10.7	830	931

REGISTERED CIVIL ENGINEER DATE

PLANS APPROVAL DATE

REGISTERED PROFESSIONAL ENGINEER — MATTHEW KLEYMANN — No. 91100 — Exp. 3/31/26 — CIVIL — STATE OF CALIFORNIA

THE STATE OF CALIFORNIA OR ITS OFFICERS OR AGENTS SHALL NOT BE RESPONSIBLE FOR THE ACCURACY OR COMPLETENESS OF SCANNED COPIES OF THIS PLAN SHEET.

SCCRTC
1523 PACIFIC AVE
SANTA CRUZ, CA 95060

MARK THOMAS
701 UNIVERSITY AVE, STE 200
SACRAMENTO, CA 95825

	BY	CHECKED
DESIGN	M. KLEYMANN	X
DETAILS	J. VALENZUELA	X
QUANTITIES	X	X

PREPARED FOR THE STATE OF CALIFORNIA DEPARTMENT OF TRANSPORTATION

M. KLEYMANN
PROJECT ENGINEER

DESIGN OVERSIGHT

SIGN OFF DATE

BRIDGE No. 36-XXXX
POST MILE X

APTOS CREEK PEDESTRIAN BRIDGE

METAL BRIDGE RAILING DETAILS No. 3

STRUCTURES DESIGN DETAIL SHEET (ENGLISH) (REVISION 8/16/2021)

DATE PLOTTED => 4/1/2025 TIME PLOTTED => 12:28 PM
FILE => 39_Aptos Creek PB_RDT3.dwg USERNAME => JVALENZUELA

ORIGINAL SCALE IN INCHES FOR REDUCED PLANS 0 1 2 3

PROJECT NUMBER & PHASE:0518000116

COUNTY/ROUTE: SCR/1
CONTRACT No.: 05-0C734

DISREGARD PRINTS BEARING EARLIER REVISION DATES

REVISION DATES					SHEET	OF
					39	39

Dist	COUNTY	ROUTE	POST MILES TOTAL PROJECT	SHEET No.	TOTAL SHEETS
5	SCR	1	8.1/10.7	----	931

REGISTERED CIVIL ENGINEER DATE

PLANS APPROVAL DATE

REGISTERED PROFESSIONAL ENGINEER
MATTHEW KLEYMANN
No. 91100
Exp. 3/31/26
CIVIL
STATE OF CALIFORNIA

THE STATE OF CALIFORNIA OR ITS OFFICERS OR AGENTS SHALL NOT BE RESPONSIBLE FOR THE ACCURACY OR COMPLETENESS OF SCANNED COPIES OF THIS PLAN SHEET.

SCCRTC
1523 PACIFIC AVE
SANTA CRUZ, CA 95060

MARK THOMAS
701 UNIVERSITY AVE, STE 200
SACRAMENTO, CA 95825

SHEET PLACEHOLDER

DRAFT - NOT FOR CONSTRUCTION

DESIGN OVERSIGHT

SIGN OFF DATE

	BY	CHECKED
DESIGN	M. KLEYMANN	X
DETAILS	J. VALENZUELA	X
QUANTITIES	X	X

PREPARED FOR THE STATE OF CALIFORNIA DEPARTMENT OF TRANSPORTATION

M. KLEYMANN
PROJECT ENGINEER

BRIDGE No. 36-XXXX
POST MILE X

APTOS CREEK PEDESTRIAN BRIDGE

SUGGESTED ERECTION SEQUENCE No. 1

STRUCTURES DESIGN DETAIL SHEET (ENGLISH) (REVISION 8/16/2021)

DATE PLOTTED => 4/1/2025 TIME PLOTTED => 12:28 PM
FILE => 40_Aptos Creek PB_SES1.dwg USERNAME => JVALENZUELA

ORIGINAL SCALE IN INCHES FOR REDUCED PLANS 0 1 2 3

PROJECT NUMBER & PHASE:0518000116 COUNTY/ROUTE:SCR/1 CONTRACT No.:05-0C734

DISREGARD PRINTS BEARING EARLIER REVISION DATES

REVISION DATES				SHEET	OF
				40	39

Dist	COUNTY	ROUTE	POST MILES TOTAL PROJECT	SHEET No.	TOTAL SHEETS
5	SCR	1	8.1/10.7	832	931

REGISTERED CIVIL ENGINEER DATE

PLANS APPROVAL DATE

REGISTERED PROFESSIONAL ENGINEER
MATTHEW KLEYMANN
No. 91100
Exp. 3/31/26
CIVIL
STATE OF CALIFORNIA

THE STATE OF CALIFORNIA OR ITS OFFICERS OR AGENTS SHALL NOT BE RESPONSIBLE FOR THE ACCURACY OR COMPLETENESS OF SCANNED COPIES OF THIS PLAN SHEET.

SCCRTC
1523 PACIFIC AVE
SANTA CRUZ, CA 95060

MARK THOMAS
701 UNIVERSITY AVE, STE 200
SACRAMENTO, CA 95825

SHEET PLACEHOLDER

DRAFT - NOT FOR CONSTRUCTION

DESIGN OVERSIGHT

SIGN OFF DATE

	BY	CHECKED
DESIGN	M. KLEYMANN	X
DETAILS	J. VALENZUELA	X
QUANTITIES	X	X

PREPARED FOR THE STATE OF CALIFORNIA DEPARTMENT OF TRANSPORTATION

M. KLEYMANN
PROJECT ENGINEER

BRIDGE No. 36-XXXX
POST MILE X

APTOS CREEK PEDESTRIAN BRIDGE

SUGGESTED ERECTION SEQUENCE No. 2

STRUCTURES DESIGN DETAIL SHEET (ENGLISH) (REVISION 8/16/2021)

DATE PLOTTED => 4/1/2025 TIME PLOTTED => 12:28 PM
FILE => 41_Aptos Creek PB_SES2.dwg USERNAME => JVALENZUELA

ORIGINAL SCALE IN INCHES FOR REDUCED PLANS 0 1 2 3

PROJECT NUMBER & PHASE:0518000116

COUNTY/ROUTE: SCR/1
CONTRACT No.: 05-0C734

DISREGARD PRINTS BEARING EARLIER REVISION DATES

REVISION DATES				SHEET	OF
				41	39

Dist	COUNTY	ROUTE	POST MILES TOTAL PROJECT	SHEET No.	TOTAL SHEETS
5	SCR	1	8.1/10.7	#####	#####

REGISTERED CIVIL ENGINEER DATE

PLANS APPROVAL DATE

REGISTERED PROFESSIONAL ENGINEER — JON ROBERT SAMPSON — No. 4344 — Exp. 3/31/25 STRUCTURAL — STATE OF CALIFORNIA

THE STATE OF CALIFORNIA OR ITS OFFICERS OR AGENTS SHALL NOT BE RESPONSIBLE FOR THE ACCURACY OR COMPLETENESS OF SCANNED COPIES OF THIS PLAN SHEET.

SCCRTC
1523 PACIFIC AVE
SANTA CRUZ, CA 95060

MARK THOMAS
701 UNIVERSITY AVE, STE 200
SACRAMENTO, CA 95825

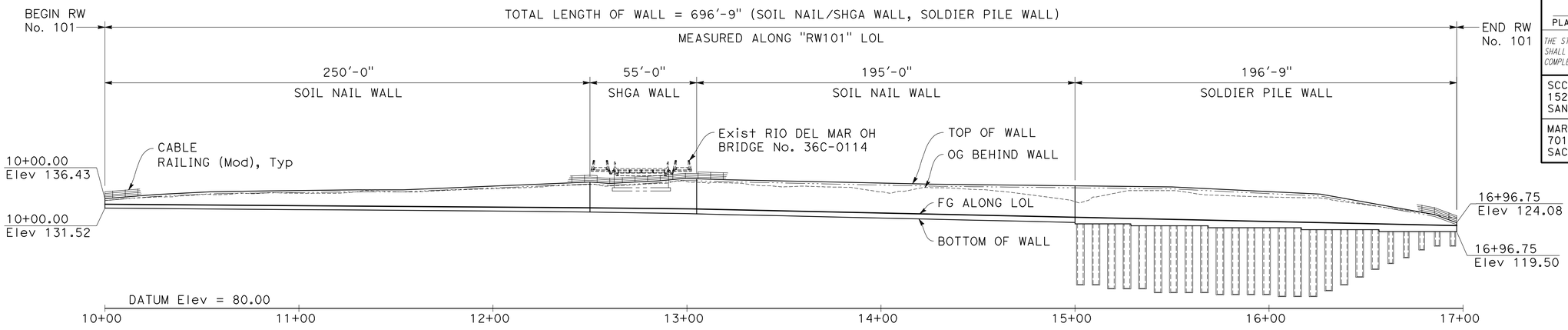

DEVELOPED MIRRORED ELEVATION

1' = 30'

NOTES:

1. For General Notes and Index to Plans, see "INDEX TO PLANS" sheet.

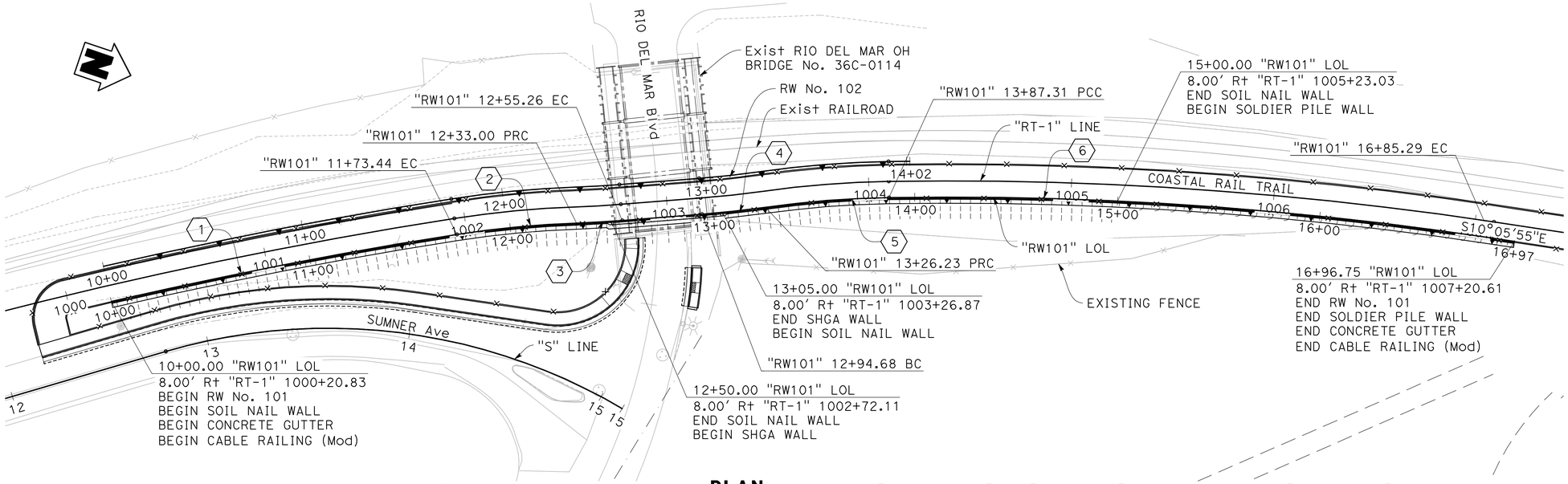

PLAN

1' = 30'

CURVE DATA

1 "RW101" LOL	R = 2392.00'	Δ = 04°09'16" T = 86.76' L = 173.44'
2 "RW101" LOL	R = 492.00'	Δ = 06°56'07" T = 29.81' L = 59.55'
3 "RW101" LOL	R = 508.00'	Δ = 02°30'40" T = 11.13' L = 22.26'
4 "RW101" LOL	R = 508.00'	Δ = 03°33'30" T = 15.79' L = 31.55'
5 "RW101" LOL	R = 492.00'	Δ = 07°06'45" T = 30.58' L = 61.08'
6 "RW101" LOL	R = 1792.00'	Δ = 09°31'39" T = 149.34' L = 297.98'

DRAFT - NOT FOR CONSTRUCTION

DESIGN OVERSIGHT	DESIGN	BY J. SAMPSON	CHECKED M. MOORE	SEISMIC ANALYSIS	BY X	CHECKED X	PREPARED FOR THE STATE OF CALIFORNIA DEPARTMENT OF TRANSPORTATION	J. SAMPSON PROJECT ENGINEER	BRIDGE No. 36-XXXX
SIGN OFF DATE	DETAILS	BY J. VALENZUELA	CHECKED M. MOORE	LAYOUT	BY X	CHECKED X			POST MILE X
	QUANTITIES	BY X	CHECKED X	SPECIFICATIONS	BY X	PLANS AND SPECS COMPARED X			

RETAINING WALL No. 101

GENERAL PLAN (1 OF 2)

STRUCTURES DESIGN GENERAL PLAN SHEET (ENGLISH) (REVISION 2/8/2022)

DATE PLOTTED => 8/5/2024 TIME PLOTTED => 10:56 AM
FILE => RW101_01_GP1.dwg USERNAME => JVALENZUELA

ORIGINAL SCALE IN INCHES FOR REDUCED PLANS 0 1 2 3

PROJECT NUMBER & PHASE: 05200000831 COUNTY/ROUTE: SCR/1 CONTRACT No.: 05-0C734

DISREGARD PRINTS BEARING EARLIER REVISION DATES

REVISION DATES				SHEET	OF
1/2/24				1	16

Dist	COUNTY	ROUTE	POST MILES TOTAL PROJECT	SHEET No.	TOTAL SHEETS
5	SCR	1	8.1/10.7	####	#####

REGISTERED CIVIL ENGINEER DATE

PLANS APPROVAL DATE

REGISTERED PROFESSIONAL ENGINEER
JON ROBERT SAMPSON
No. 4344
Exp. 3/31/25
STRUCTURAL
STATE OF CALIFORNIA

THE STATE OF CALIFORNIA OR ITS OFFICERS OR AGENTS SHALL NOT BE RESPONSIBLE FOR THE ACCURACY OR COMPLETENESS OF SCANNED COPIES OF THIS PLAN SHEET.

SCCRTC
1523 PACIFIC AVE
SANTA CRUZ, CA 95060

MARK THOMAS
701 UNIVERSITY AVE, STE 200
SACRAMENTO, CA 95825

NOTES:

1. For Retaining Wall No. 102, see "RETAINING WALL No. 102 PLANS".

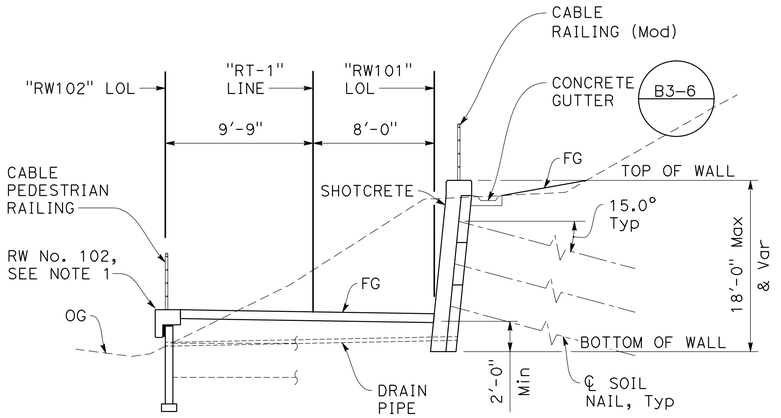

Sta 10+00.00 THRU Sta 12+50.00
and Sta 13+05.00 THRU Sta 13+97.84

TYPICAL SECTION A

1" = 5'

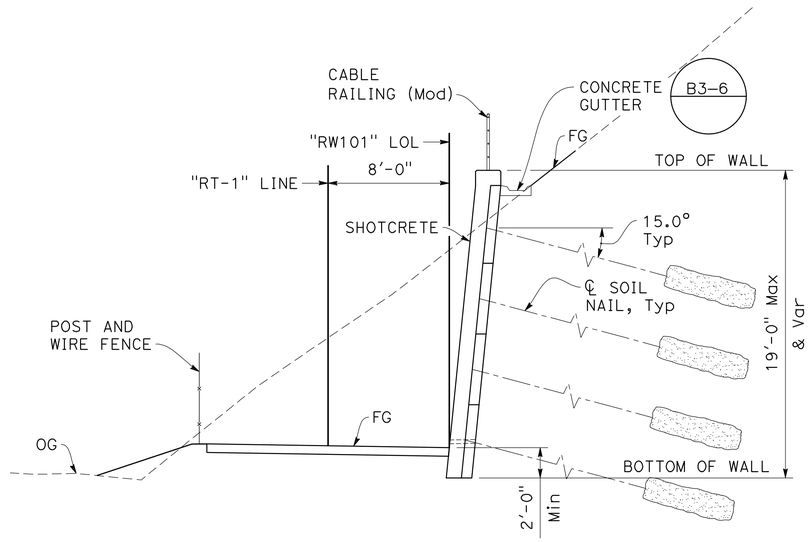

Sta 13+97.84 THRU Sta 15+00.00

TYPICAL SECTION B

1" = 5'

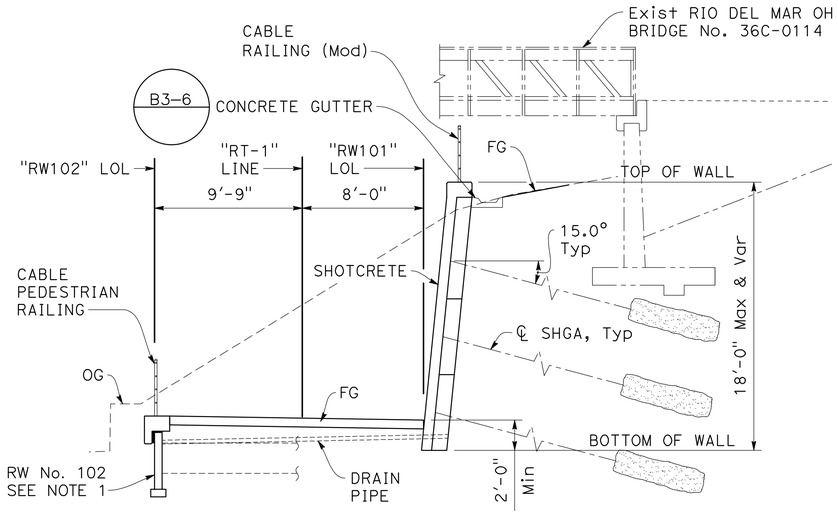

Sta 12+50.00 THRU Sta 13+05.00

TYPICAL SECTION C

1" = 5'

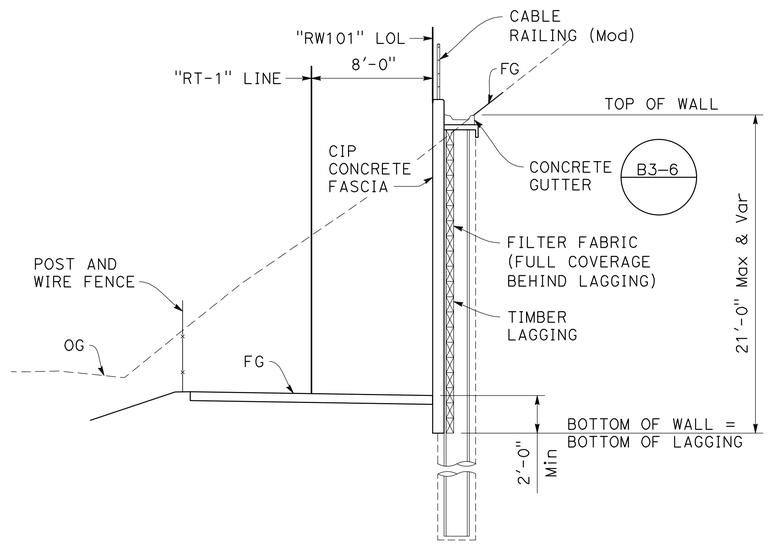

Sta 15+00.00 THRU Sta 16+06.75

TYPICAL SECTION D

1" = 5'

DRAFT - NOT FOR CONSTRUCTION

DESIGN OVERSIGHT	DESIGN	BY J. SAMPSON	CHECKED M. MOORE	SEISMIC ANALYSIS	BY X	CHECKED X	PREPARED FOR THE STATE OF CALIFORNIA DEPARTMENT OF TRANSPORTATION
	DETAILS	BY J. VALENZUELA	CHECKED M. MOORE	LAYOUT	BY X	CHECKED X	
SIGN OFF DATE	QUANTITIES	BY X	CHECKED X	SPECIFICATIONS	BY X	PLANS AND SPECS COMPARED X	

J. SAMPSON
PROJECT ENGINEER

BRIDGE No. 36-XXXX
POST MILE X

RETAINING WALL No. 101
GENERAL PLAN (2 OF 2)

STRUCTURES DESIGN GENERAL PLAN SHEET (ENGLISH) (REVISION 2/8/2022)

DATE PLOTTED => 8/5/2024
FILE => RW101_02_GP2.dwg

TIME PLOTTED => 11:07 AM
USERNAME => JVALENZUELA

ORIGINAL SCALE IN INCHES FOR REDUCED PLANS 0 1 2 3

PROJECT NUMBER & PHASE:05200000831

COUNTY/ROUTE:SCR/1
CONTRACT No.:05-0C734

DISREGARD PRINTS BEARING EARLIER REVISION DATES

REVISION DATES					SHEET	OF
1/2/34					2	16

GENERAL NOTES

DESIGN: AASHTO LRFD Bridge Design Specification, 8th Edition with California Amendments, preface dated April 2019
Geotechnical Engineering Circular 7 (NHI 2015) FHWA in 2015

Standard Plans and Specifications, 2023 edition with Revised Standard Plans, dated January 2024.

Structural Technical Policies as of February 2023.

SHGA WALL:
For Determination of Apparent Earth Pressure Active Earth
Pressure Coefficient K_a = 0.64
Soil Unit Weight = 125 pcf
Friction Angle = 32°
ΔK_{AE} = 0.32
K_h = 0.35

SHOTCRETE:
fy = 60 ksi (Yield Strength of Reinforcement)
f'c = 3.6 ksi (28 Days Compressive Strength)
f'ci = 2.88 ksi (at Time of Stressing)

REINFORCED CONCRETE:
fy = 60 ksi
f'c = 3.6 ksi

PRESTRESSING STEEL:
See "SHGA DETAILS No. 2" sheet.

HEADED STUDS:
Type B

STRUCTURAL STEEL:
fy = 36 ksi (ASTM A709, GRADE 36)
Headed Stud Tensile Strength = 65 ksi min

SOIL NAIL:
ASTM A615, fy = 60 ksi

Depth (ft)	Unit Wt (pcf)	Final Angle (Degrees)	Design Pullout Resistance, Q_b (plf)
0-5	120	28	132
5-10	120	32	188
>5	120	32	226

SOLDIER PILE WALL:
For Determination of Apparent Earth Pressure Active Earth
Pressure Coefficient K
Soil Unit Weight = 120 pcf
Friction Angle = 32°
ΔK_{AE} = .28
K_h = 0.35
K_p = 4.70

STRUCTURE TIMBER:
Preservatives-Treated Douglas Fir, Grade No. 1 or better.
Timber to be full sawn.

STEEL SOLDIER PILING:
fymin = 50 ksi

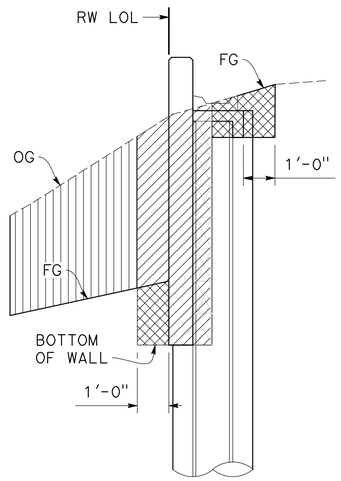

LIMITS OF PAYMENT FOR STRUCTURE EXCAVATION & BACKFILL (SOLDIER PILE WALL)
NO SCALE

QUANTITIES

STRUCTURE EXCAVATION (SOLDIER PILE WALL)	____	CY
STRUCTURE EXCAVATION (SOIL NAIL WALL)	____	CY
STRUCTURE EXCAVATION (GROUND ANCHOR WALL)	____	CY
STRUCTURE BACKFILL (GROUND ANCHOR WALL)	____	CY
STRUCTURE BACKFILL (SOIL NAIL WALL)	____	CY
STRUCTURE BACKFILL (SOLDIER PILE WALL)	____	CY
CONCRETE BACKFILL (SOLDIER PILE WALL)	____	CY
LEAN CONCRETE BACKFILL	____	CY
GROUND ANCHOR (SUB HORIZONTAL)	____	EA
SOIL NAIL	____	LF
STEEL SOLDIER PILE (W24x94)	____	LF
STEEL SOLDIER PILE (W36x150)	____	LF
STEEL SOLDIER PILE (W36x260)	____	LF
STEEL SOLDIER PILE (W36x300)	____	LF
STEEL SOLDIER PILE (W36x328)	____	LF
STEEL SOLDIER PILE (W36x359)	____	LF
36" DRILLED HOLE	____	LF
48" DRILLED HOLE	____	LF
STRUCTURAL CONCRETE (RETAINING WALL)	____	CY
BAR REINFORCING STEEL (RETAINING WALL)	____	LB
STRUCTURAL SHOTCRETE	____	CY
TIMBER LAGGING	____	MFBM
CLEAN AND PAINT STEEL SOLDIER PILING	____	LS
MINOR CONCRETE (GUTTER)	____	LF
CABLE RAILING (Mod)	____	LF

Dist	COUNTY	ROUTE	POST MILES TOTAL PROJECT	SHEET No.	TOTAL SHEETS
5	SCR	1	8.1/10.7	####	####

REGISTERED CIVIL ENGINEER DATE

PLANS APPROVAL DATE

REGISTERED PROFESSIONAL ENGINEER
JON ROBERT SAMPSON
No. 4344
Exp. 3/31/25
STRUCTURAL
STATE OF CALIFORNIA

THE STATE OF CALIFORNIA OR ITS OFFICERS OR AGENTS SHALL NOT BE RESPONSIBLE FOR THE ACCURACY OR COMPLETENESS OF SCANNED COPIES OF THIS PLAN SHEET.

SCCRTC
1523 PACIFIC AVE
SANTA CRUZ, CA 95060

MARK THOMAS
701 UNIVERSITY AVE, STE 200
SACRAMENTO, CA 95825

INDEX TO PLAN

SHEET No.	TITLE
1	GENERAL PLAN No. 1
2	GENERAL PLAN No. 2
3	INDEX TO PLANS
4	RETAINING WALL LAYOUT No. 1
5	RETAINING WALL LAYOUT No. 2
6	RETAINING WALL LAYOUT No. 3
7	SOIL NAIL WALL DETAILS
8	SHGA WALL DETAILS No. 1
9	SHGA WALL DETAILS No. 2
10	WALL DRAINAGE DETAILS
11	SOLDIER PILE WALL DETAILS No. 1
12	SOLDIER PILE WALL DETAILS No. 2
13	SOLDIER PILE WALL DETAILS No. 3
14	SOLDIER PILE WALL DETAILS No. 4
15	LOG OF TEST BORINGS 1 OF 2
16	LOG OF TEST BORINGS 2 OF 2

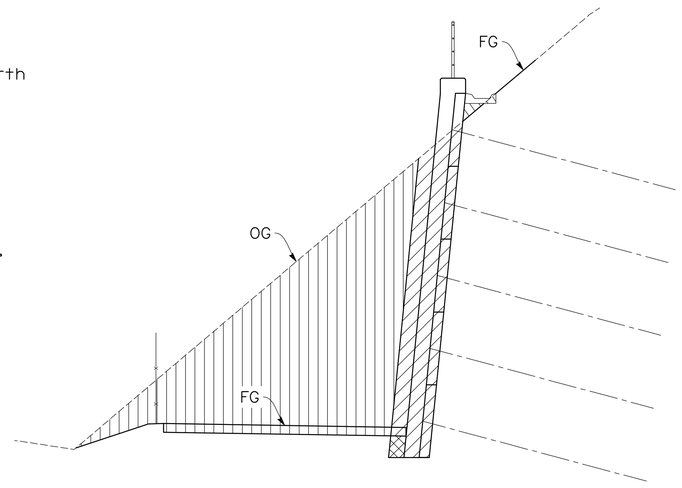

LIMITS OF PAYMENT FOR STRUCTURE EXCAVATION & BACKFILL (SOIL NAIL WALL)
NO SCALE

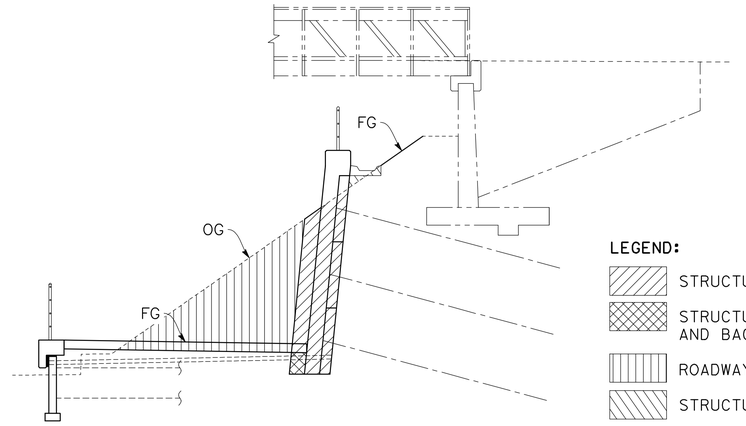

LIMITS OF PAYMENT FOR STRUCTURE EXCAVATION & BACKFILL (SHGA WALL)
NO SCALE

DRAFT - NOT FOR CONSTRUCTION

X DESIGN OVERSIGHT		DESIGN	BY M. MOORE	CHECKED X	PREPARED FOR THE STATE OF CALIFORNIA DEPARTMENT OF TRANSPORTATION	J. SAMPSON PROJECT ENGINEER	BRIDGE No. 36-XXXX
X SIGN OFF DATE		DETAILS	BY J. VALENZUELA	CHECKED X			POST MILE X
		QUANTITIES	BY X	CHECKED X			

RETAINING WALL No. 101
INDEX TO PLAN

STRUCTURES DESIGN DETAIL SHEET (ENGLISH) (REVISION 8/16/2021)
DATE PLOTTED => 8/5/2024 TIME PLOTTED => 2:30 PM
FILE => RW101_03_ITP.dwg USERNAME => JVALENZUELA
ORIGINAL SCALE IN INCHES FOR REDUCED PLANS 0 1 2 3
PROJECT NUMBER & PHASE: 05200000831
COUNTY/ROUTE: SCR/1 CONTRACT No.: 05-0C734
DISREGARD PRINTS BEARING EARLIER REVISION DATES
REVISION DATES
SHEET 3 OF 16

Dist	COUNTY	ROUTE	POST MILES TOTAL PROJECT	SHEET No.	TOTAL SHEETS
5	SCR	1	8.1/10.7	####	####

REGISTERED CIVIL ENGINEER DATE

PLANS APPROVAL DATE

REGISTERED PROFESSIONAL ENGINEER — JON ROBERT SAMPSON — No. 4344 — Exp. 3/31/25 STRUCTURAL — STATE OF CALIFORNIA

THE STATE OF CALIFORNIA OR ITS OFFICERS OR AGENTS SHALL NOT BE RESPONSIBLE FOR THE ACCURACY OR COMPLETENESS OF SCANNED COPIES OF THIS PLAN SHEET.

SCCRTC
1523 PACIFIC AVE
SANTA CRUZ, CA 95060

MARK THOMAS
701 UNIVERSITY AVE, STE 200
SACRAMENTO, CA 95825

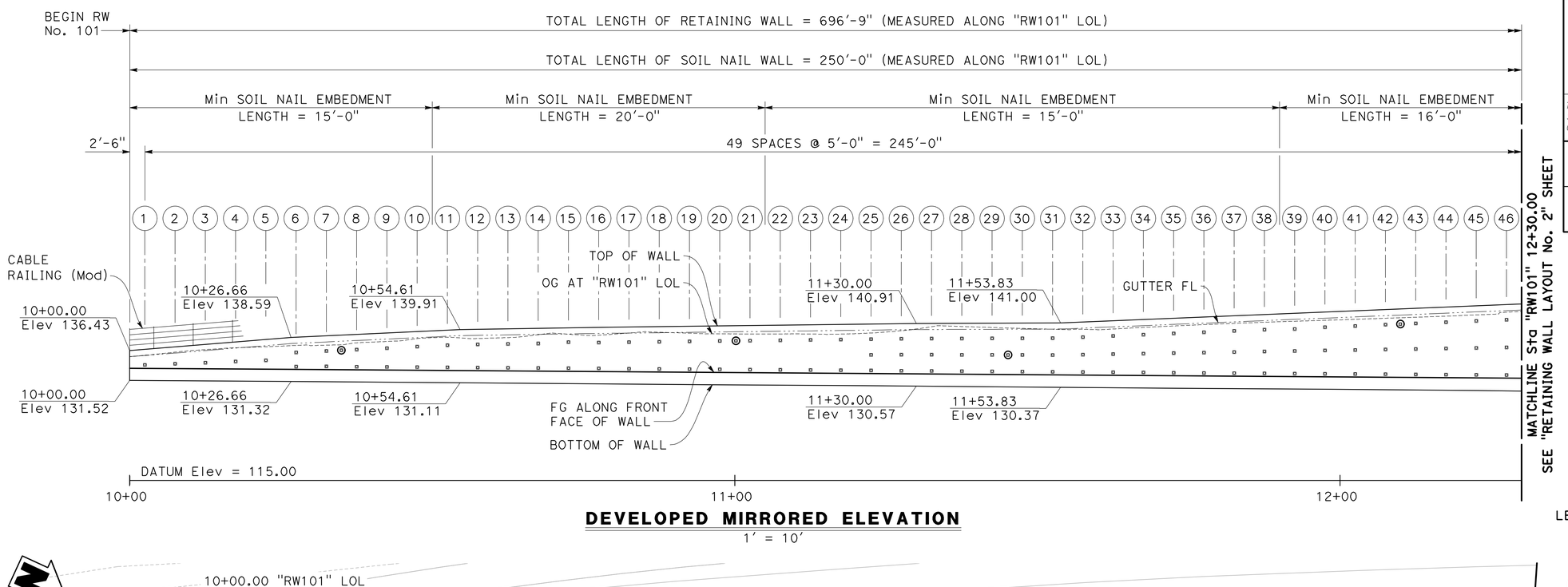

DEVELOPED MIRRORED ELEVATION

1' = 10'

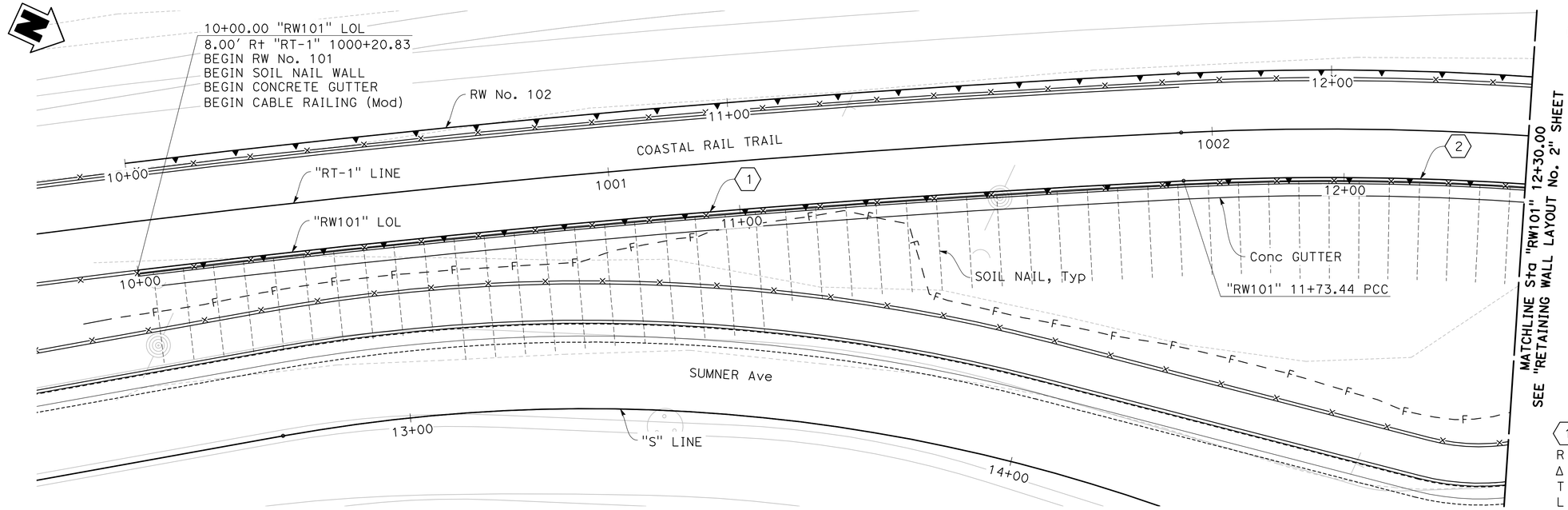

PLAN

1" = 10'

LEGEND:

- ∘ SHGA or Soil Nail Location
- ◎ Proof Test Soil Nail Location
- (1) SHGA or Soil Nail Column Number

CURVE DATA

(1) "RW101" LOL	(2) "RW101" LOL
R = 2392.00'	R = 492.00'
Δ = 04°09'16"	Δ = 06°56'07"
T = 86.76'	T = 29.81'
L = 173.44'	L = 59.55'

DRAFT - NOT FOR CONSTRUCTION

X DESIGN OVERSIGHT	DESIGN	BY M. MOORE	CHECKED X	PREPARED FOR THE STATE OF CALIFORNIA DEPARTMENT OF TRANSPORTATION	J. SAMPSON PROJECT ENGINEER
X SIGN OFF DATE	DETAILS	BY J. VALENZUELA	CHECKED X		BRIDGE No. 36-XXXX
	QUANTITIES	BY X	CHECKED X		POST MILE X

RETAINING WALL No. 101

RETAINING WALL LAYOUT No. 1

STRUCTURES DESIGN DETAIL SHEET (ENGLISH) (REVISION 8/16/2021)

DATE PLOTTED => 8/5/2024
FILE => RW101_04-06_SP.dwg
TIME PLOTTED => 1:53 PM
USERNAME => JVALENZUELA
ORIGINAL SCALE IN INCHES FOR REDUCED PLANS 0 1 2 3

PROJECT NUMBER & PHASE: 05200000831
COUNTY/ROUTE: SCR/1
CONTRACT No.: 05-0C734

DISREGARD PRINTS BEARING EARLIER REVISION DATES

REVISION DATES					SHEET	OF
					4	16

Dist	COUNTY	ROUTE	POST MILES TOTAL PROJECT	SHEET No.	TOTAL SHEETS
5	SCR	1	8.1/10.7	####	####

REGISTERED CIVIL ENGINEER DATE

PLANS APPROVAL DATE

REGISTERED PROFESSIONAL ENGINEER — JON ROBERT SAMPSON — No. 4344 — Exp. 3/31/25 STRUCTURAL — STATE OF CALIFORNIA

THE STATE OF CALIFORNIA OR ITS OFFICERS OR AGENTS SHALL NOT BE RESPONSIBLE FOR THE ACCURACY OR COMPLETENESS OF SCANNED COPIES OF THIS PLAN SHEET.

SCCRTC
1523 PACIFIC AVE
SANTA CRUZ, CA 95060

MARK THOMAS
701 UNIVERSITY AVE, STE 200
SACRAMENTO, CA 95825

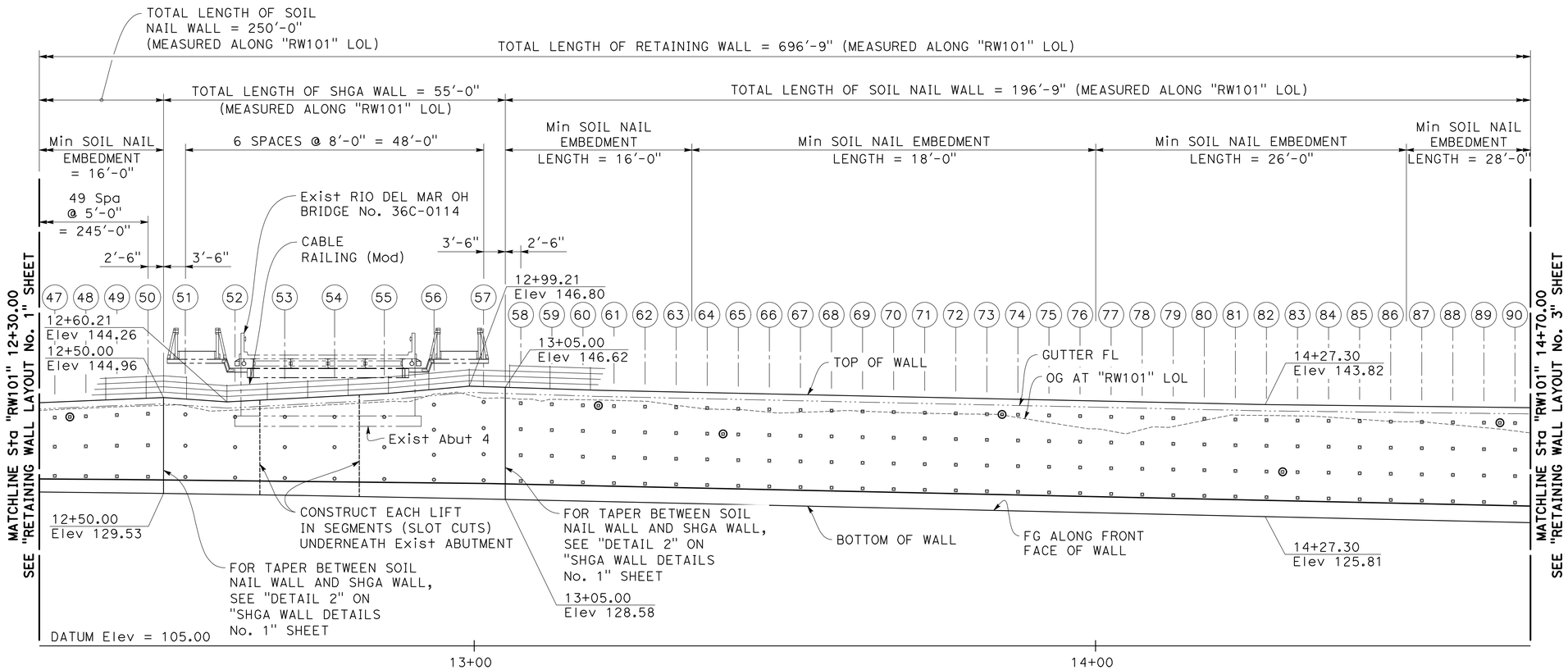

DEVELOPED MIRRORED ELEVATION

1' = 10'

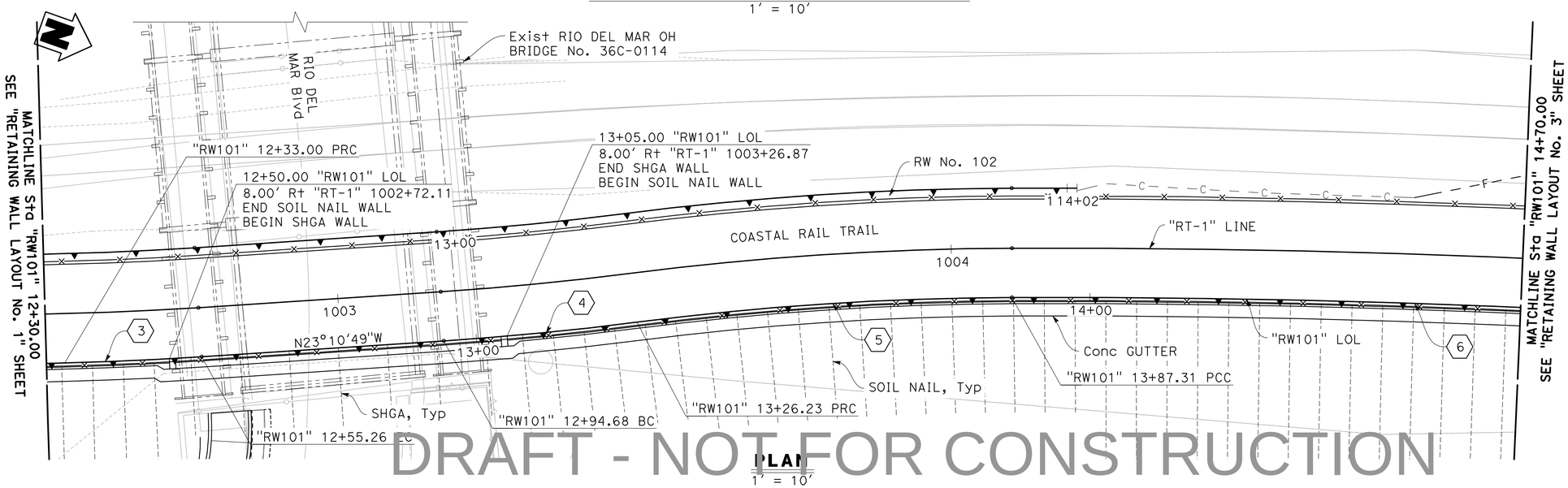

PLAN

1' = 10'

LEGEND:

- ◦ ▫ SHGA or Soil Nail Location
- ◎ Proof Test Soil Nail Location
- (1) SHGA or Soil Nail Column Number

CURVE DATA

(3)	"RW101" LOL	(4)	"RW101" LOL
R	= 508.00'	R	= 508.00'
Δ	= 02°30'40"	Δ	= 03°33'30"
T	= 11.13'	T	= 15.79'
L	= 22.26'	L	= 31.55'
(5)	"RW101" LOL	(6)	"RW101" LOL
R	= 492.00'	R	= 1792.00'
Δ	= 07°06'45"	Δ	= 09°31'39"
T	= 30.58'	T	= 149.34'
L	= 61.08'	L	= 297.98'

DRAFT - NOT FOR CONSTRUCTION

X DESIGN OVERSIGHT		DESIGN	BY M. MOORE	CHECKED X	PREPARED FOR THE STATE OF CALIFORNIA DEPARTMENT OF TRANSPORTATION
X SIGN OFF DATE		DETAILS	BY J. VALENZUELA	CHECKED X	J. SAMPSON PROJECT ENGINEER
		QUANTITIES	BY X	CHECKED X	BRIDGE No. 36-XXXX; POST MILE X

RETAINING WALL No. 101

RETAINING WALL LAYOUT No. 2

STRUCTURES DESIGN DETAIL SHEET (ENGLISH) (REVISION 8/16/2021)

DATE PLOTTED => 8/5/2024
FILE => RW101_04-06_SP.dwg
TIME PLOTTED => 1:52 PM
USERNAME => JVALENZUELA
ORIGINAL SCALE IN INCHES FOR REDUCED PLANS 0 1 2 3

PROJECT NUMBER & PHASE: 05200000831
COUNTY/ROUTE: SCR/1
CONTRACT No.: 05-0C734

DISREGARD PRINTS BEARING EARLIER REVISION DATES

REVISION DATES					SHEET	OF
					5	16

Dist	COUNTY	ROUTE	POST MILES TOTAL PROJECT	SHEET No.	TOTAL SHEETS
5	SCR	1	8.1/10.7	####	####

REGISTERED CIVIL ENGINEER DATE

PLANS APPROVAL DATE

REGISTERED PROFESSIONAL ENGINEER — JON ROBERT SAMPSON — No. 4344 — Exp. 3/31/25 STRUCTURAL — STATE OF CALIFORNIA

THE STATE OF CALIFORNIA OR ITS OFFICERS OR AGENTS SHALL NOT BE RESPONSIBLE FOR THE ACCURACY OR COMPLETENESS OF SCANNED COPIES OF THIS PLAN SHEET.

SCCRTC
1523 PACIFIC AVE
SANTA CRUZ, CA 95060

MARK THOMAS
701 UNIVERSITY AVE, STE 200
SACRAMENTO, CA 95825

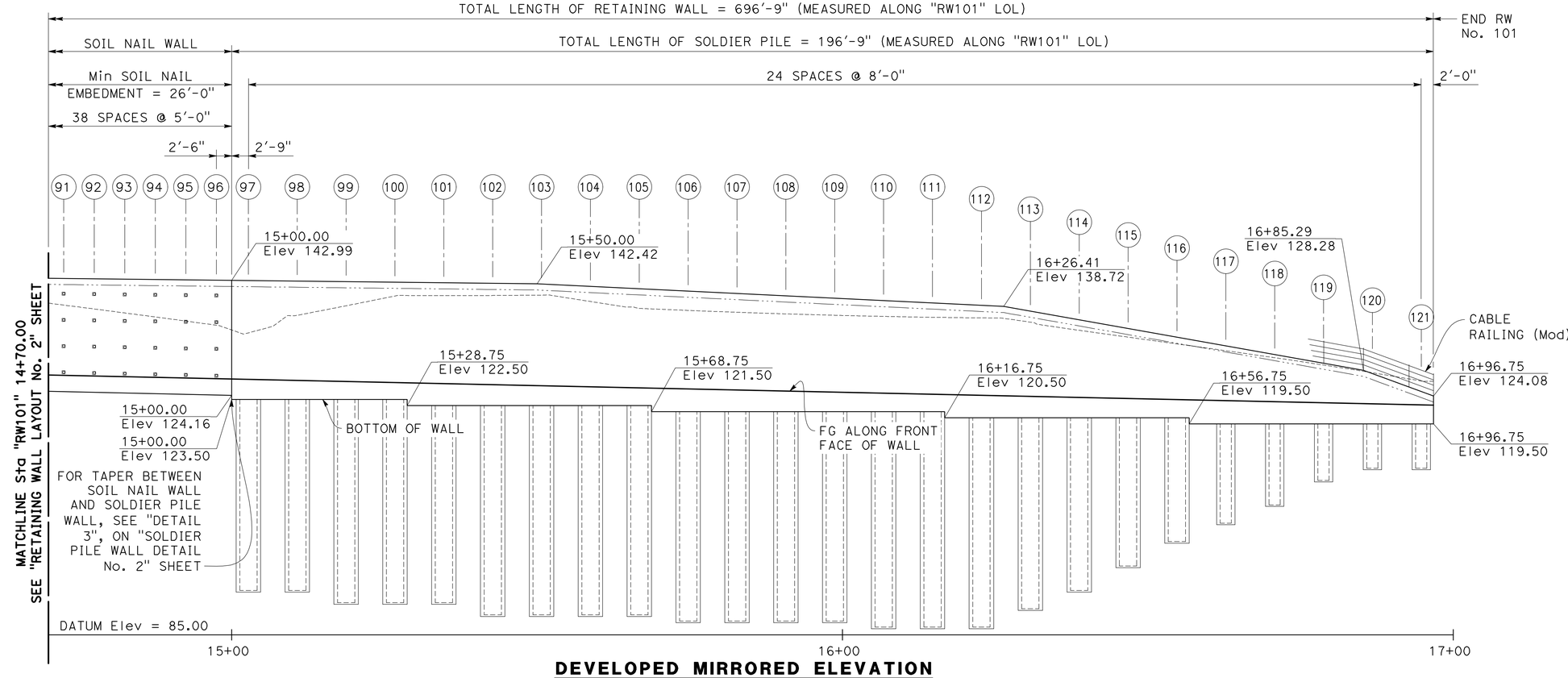

DEVELOPED MIRRORED ELEVATION
1' = 10'

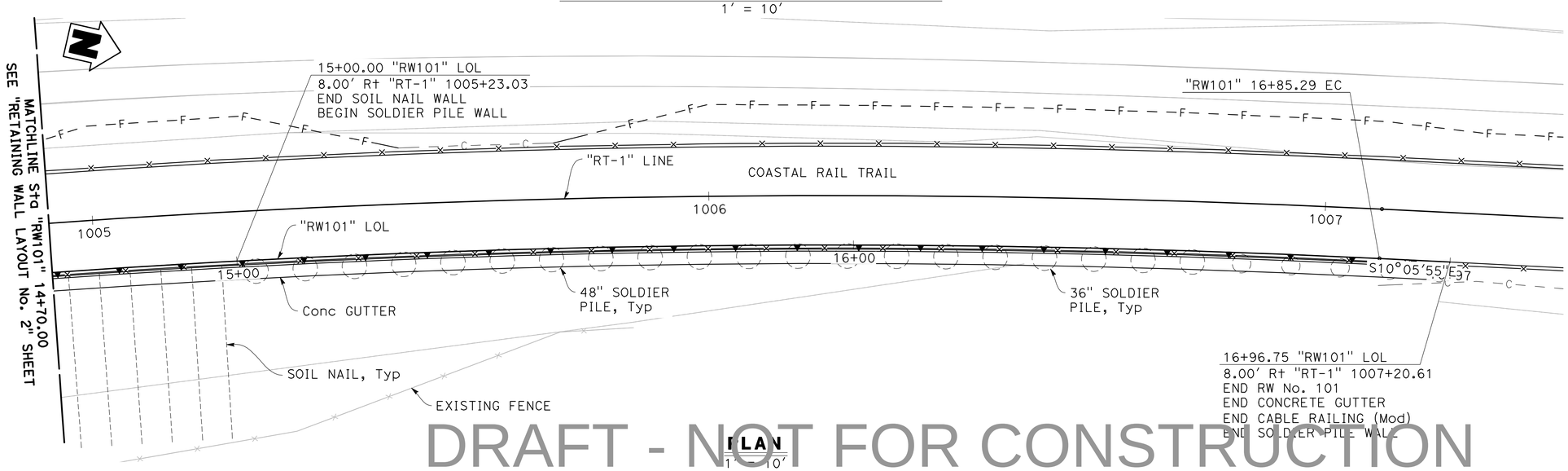

PLAN
1" = 10'

LEGEND:

- ▫ SHGA or Soil Nail Location
- ◎ Proof Test Soil Nail Location
- (1) SHGA, Soil Nail, or Soldier Pile Column Number

DRAFT - NOT FOR CONSTRUCTION

X DESIGN OVERSIGHT	DESIGN	BY M. MOORE	CHECKED X	PREPARED FOR THE STATE OF CALIFORNIA DEPARTMENT OF TRANSPORTATION	J. SAMPSON PROJECT ENGINEER
X SIGN OFF DATE	DETAILS	BY J. VALENZUELA	CHECKED X		BRIDGE No. 36-XXXX
	QUANTITIES	BY X	CHECKED X		POST MILE X

RETAINING WALL No. 101

RETAINING WALL LAYOUT No. 3

STRUCTURES DESIGN DETAIL SHEET (ENGLISH) (REVISION 8/16/2021)

DATE PLOTTED => 8/5/2024 TIME PLOTTED => 2:01 PM
FILE => RW101_04-06_SP.dwg USERNAME => JVALENZUELA

ORIGINAL SCALE IN INCHES FOR REDUCED PLANS 0 1 2 3

PROJECT NUMBER & PHASE: 05200000831 COUNTY/ROUTE: SCR/1 CONTRACT No.: 05-0C734

DISREGARD PRINTS BEARING EARLIER REVISION DATES

REVISION DATES					SHEET	OF
					6	16

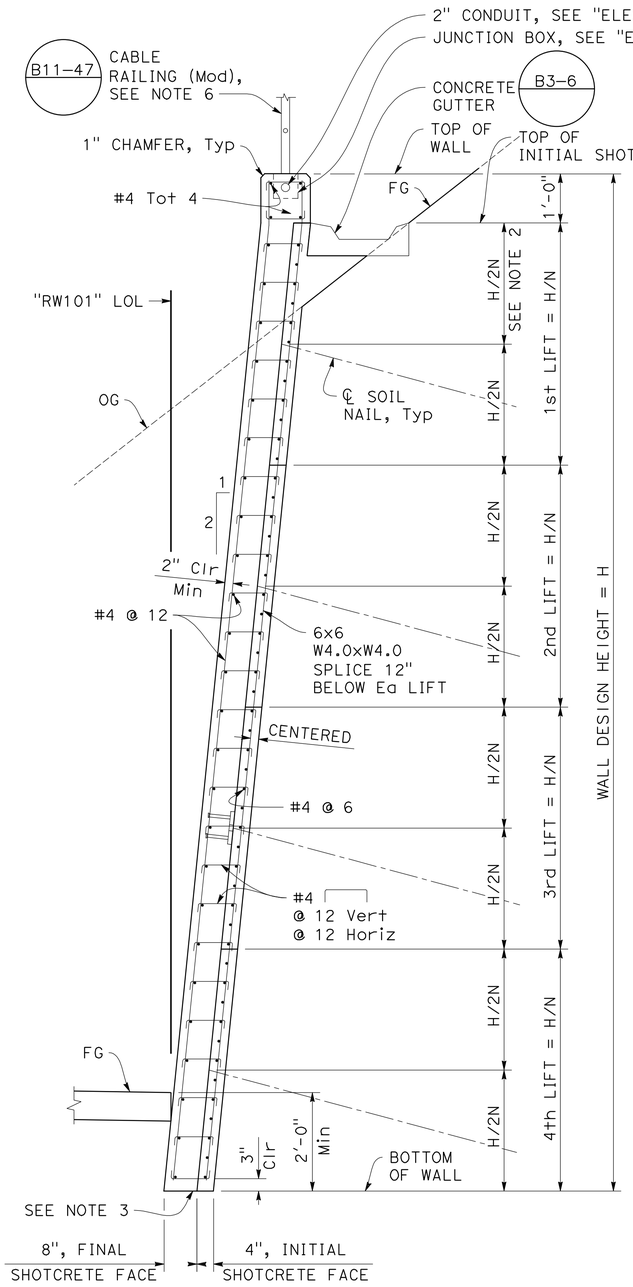

SOIL NAIL TYPICAL SECTION

NO SCALE

NOTES:
1. 4 lift shotcrete wall shown, other lift heights similar.
2. Distance from top of first lift to first hanging bar shall be 1'-0" Min and 3'-6" Max.
3. Place bottom of wall on undisturbed material.

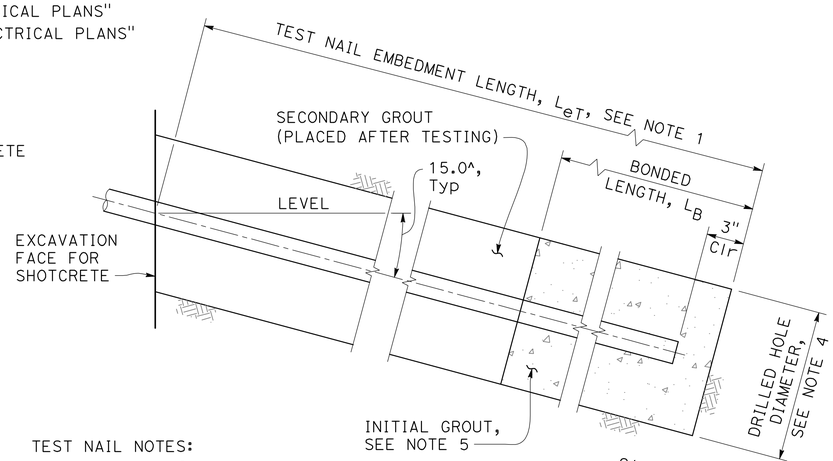

TEST NAIL NOTES:
1. The test nail embedment length L_{eT}, shall be equal to $^2/_3$ of the embedment length, L_e, of adjacent production soil nail assemblies, but not less than 12'-0".
2. The total length of the test nail assembly equals the embedment length plus the length required for jacking equipment.
3. For location of proof test nails, see "RETAINING WALL LAYOUT" sheets. Additional proof test nails will be installed and tested per the special provisions.
4. Contractor to determine test nail drilled hole diameter.
5. Finished grout surface to be normal to the bar.
6. All posts, braces, cables and hardware to be galvanized and natina stained. See Project Specifications for more information.

TEST NAIL DETAIL

NO SCALE

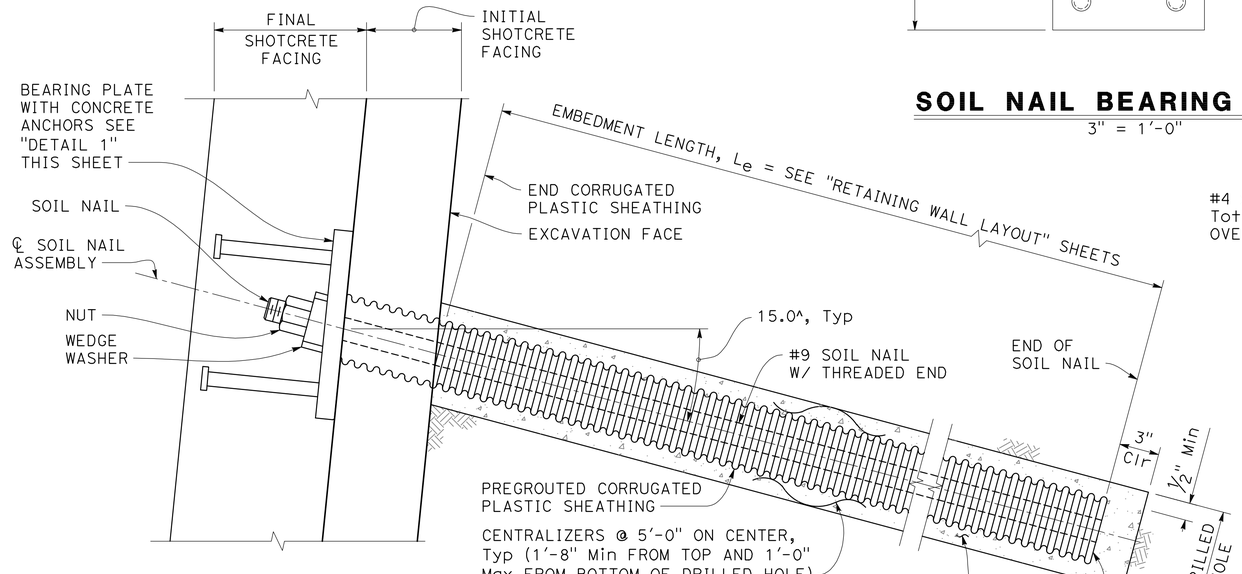

SOIL NAIL AND BEARING PLATE DETAILS

NO SCALE

NOTES:
1. Wall facing reinforcement not shown.
2. The centralizer should be made from a plastic material to be attached to the nail in a way that will not impede the free flow of grout and be sized to position the nail tendon within approx 1" of the center of the drilled hole.
3. For wall reinforcing details, see "SOIL NAIL TYPICAL SECTION".

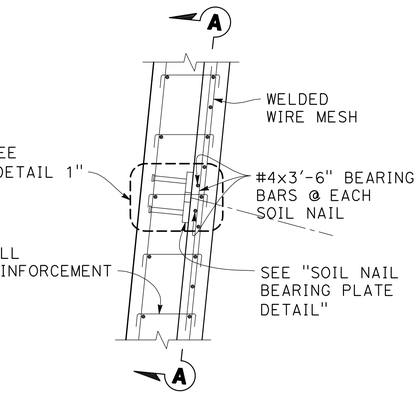

PART TYPICAL SECTION

1" = 1'-0"

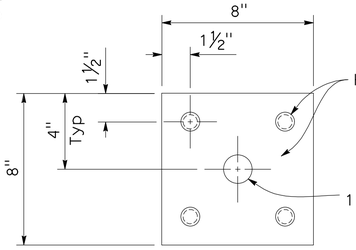

SOIL NAIL BEARING PLATE

3" = 1'-0"

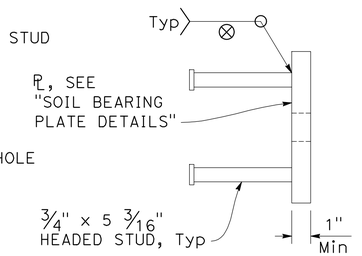

DETAIL 1

3" = 1'-0"

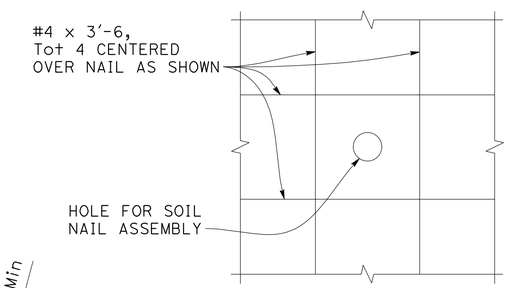

NOTE: Wall reinforcement not shown.

SECTION A-A

3" = 1'-0"

DRAFT - NOT FOR CONSTRUCTION

Dist	COUNTY	ROUTE	POST MILES TOTAL PROJECT	SHEET No.	TOTAL SHEETS
5	SCR	1	8.1/10.7	####	####

REGISTERED CIVIL ENGINEER — DATE

PLANS APPROVAL DATE

REGISTERED PROFESSIONAL ENGINEER — JON ROBERT SAMPSON — No. 4344 — Exp. 3/31/25 STRUCTURAL — STATE OF CALIFORNIA

THE STATE OF CALIFORNIA OR ITS OFFICERS OR AGENTS SHALL NOT BE RESPONSIBLE FOR THE ACCURACY OR COMPLETENESS OF SCANNED COPIES OF THIS PLAN SHEET.

SCCRTC
1523 PACIFIC AVE
SANTA CRUZ, CA 95060

MARK THOMAS
701 UNIVERSITY AVE, STE 200
SACRAMENTO, CA 95825

X
DESIGN OVERSIGHT

X
SIGN OFF DATE

	BY	CHECKED
DESIGN	M. MOORE	X
DETAILS	J. VALENZUELA	X
QUANTITIES	X	X

PREPARED FOR THE STATE OF CALIFORNIA DEPARTMENT OF TRANSPORTATION

J. SAMPSON
PROJECT ENGINEER

BRIDGE No. 36-XXXX
POST MILE X

RETAINING WALL No. 101
SOIL NAIL WALL DETAILS

STRUCTURES DESIGN DETAIL SHEET (ENGLISH) (REVISION 8/16/2021)

DATE PLOTTED => 8/7/2024
FILE => RW101_07_SND.dwg

TIME PLOTTED => 12:18 PM
USERNAME => JVALENZUELA

ORIGINAL SCALE IN INCHES FOR REDUCED PLANS 0 1 2 3

PROJECT NUMBER & PHASE: 05200000831

COUNTY/ROUTE: SCR/1
CONTRACT No.: 05-0C734

DISREGARD PRINTS BEARING EARLIER REVISION DATES →

REVISION DATES				SHEET	OF
				7	16

Dist	COUNTY	ROUTE	POST MILES TOTAL PROJECT	SHEET No.	TOTAL SHEETS
5	SCR	1	8.1/10.7	####	####

REGISTERED CIVIL ENGINEER DATE

PLANS APPROVAL DATE

REGISTERED PROFESSIONAL ENGINEER — JON ROBERT SAMPSON — No. 4344 — Exp. 3/31/25 STRUCTURAL — STATE OF CALIFORNIA

THE STATE OF CALIFORNIA OR ITS OFFICERS OR AGENTS SHALL NOT BE RESPONSIBLE FOR THE ACCURACY OR COMPLETENESS OF SCANNED COPIES OF THIS PLAN SHEET.

SCCRTC
1523 PACIFIC AVE
SANTA CRUZ, CA 95060

MARK THOMAS
701 UNIVERSITY AVE, STE 200
SACRAMENTO, CA 95825

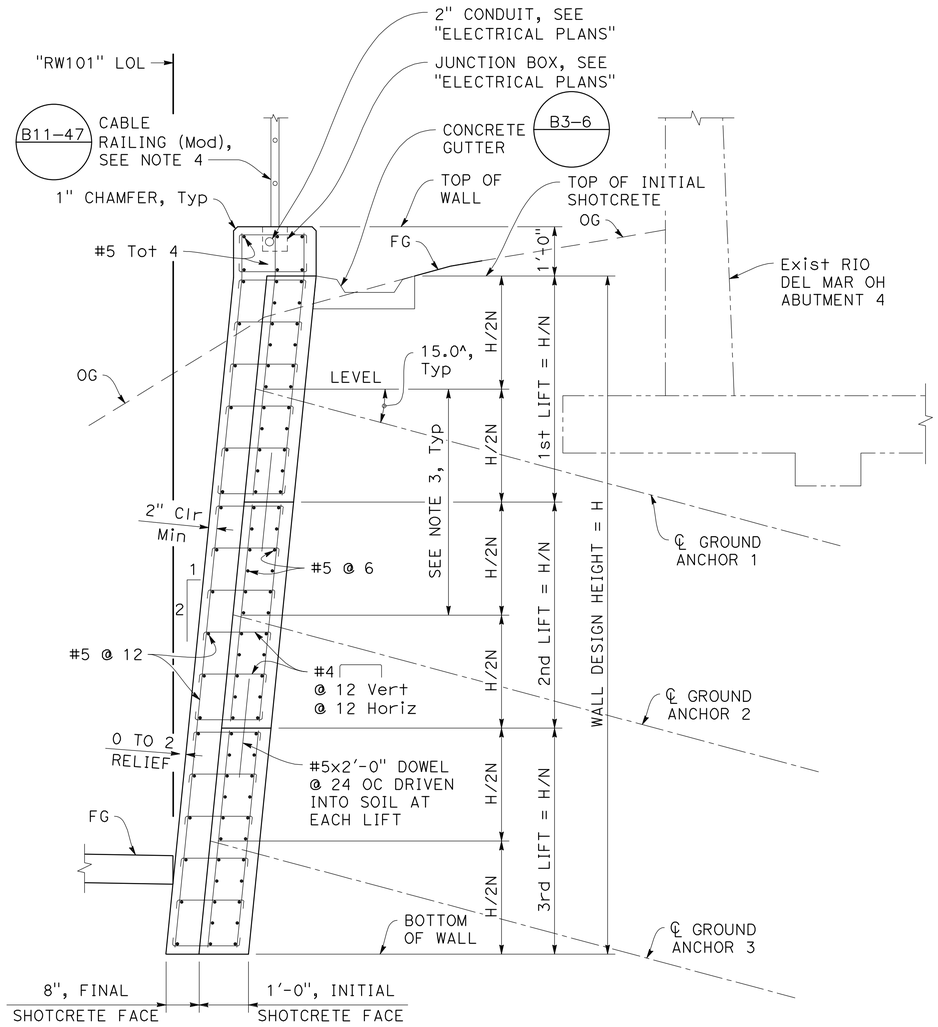

SHGA WALL TYPICAL SECTION

NO SCALE

NOTES:
1. "N" is the total number of anchors at wall section.
2. For SHGA Columns, see "RETAINING WALL LAYOUT No. 2" sheet.
3. Spacing between anchors must be 5 feet or greater.
4. All posts, braces, cables and hardware to be galvanized and natina stained. See Project Specifications for more information.

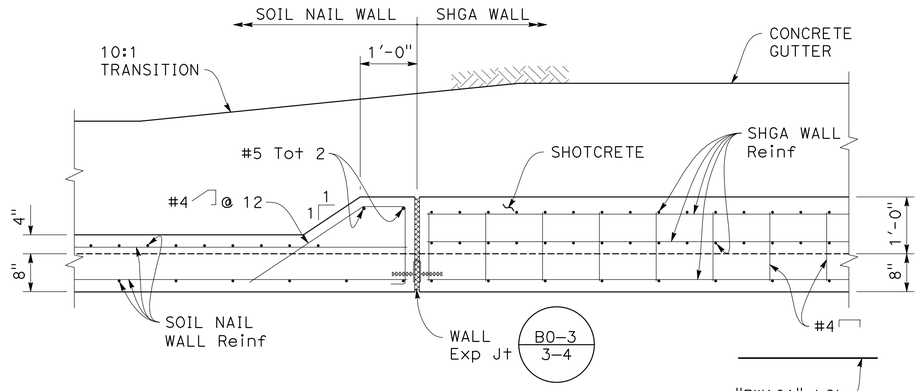

DETAIL 2

3/4" = 1'-0"

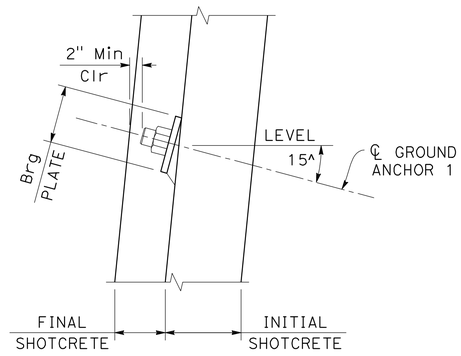

ANCHORAGE DETAIL

1" = 1'-0"

GROUND ANCHOR COLUMN SCHEDULE

SHGA COLUMN No.	FDL (kips)	FTL (kips)	LL (kips)	UNBONDED LENGTH
51	80.0	80.0	53.3	18 feet
52	90.0	90.0	60.0	18 feet
53	90.0	90.0	60.0	18 feet
54	90.0	90.0	60.0	18 feet
55	90.0	90.0	60.0	18 feet
56	90.0	90.0	60.0	18 feet
57	70.0	70.0	46.7	18 feet

FDL = Factored Design Load
FTL = Factored Test Load
LL = Lock Off Load

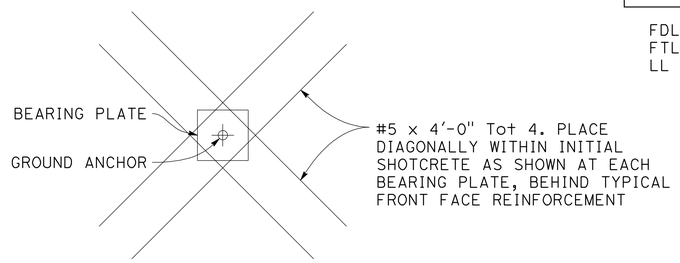

ANCHORAGE REINFORCEMENT DETAIL

1" = 1'-0"

DRAFT - NOT FOR CONSTRUCTION

X DESIGN OVERSIGHT		DESIGN	BY M. MOORE	CHECKED X	PREPARED FOR THE STATE OF CALIFORNIA DEPARTMENT OF TRANSPORTATION	J. SAMPSON PROJECT ENGINEER	BRIDGE No. 36-XXXX	RETAINING WALL No. 101
X SIGN OFF DATE		DETAILS	BY J. VALENZUELA	CHECKED X			POST MILE X	SHGA WALL DETAILS No. 1
		QUANTITIES	BY X	CHECKED X				

STRUCTURES DESIGN DETAIL SHEET (ENGLISH) (REVISION 8/16/2021)

DATE PLOTTED => 8/7/2024 TIME PLOTTED => 12:24 PM
FILE => RW101_08_SHD1.dwg USERNAME => JVALENZUELA

ORIGINAL SCALE IN INCHES FOR REDUCED PLANS 0 1 2 3

PROJECT NUMBER & PHASE: 05200000831 COUNTY/ROUTE: SCR/1 CONTRACT No.: 05-0C734

DISREGARD PRINTS BEARING EARLIER REVISION DATES →

REVISION DATES | SHEET 8 | OF 16

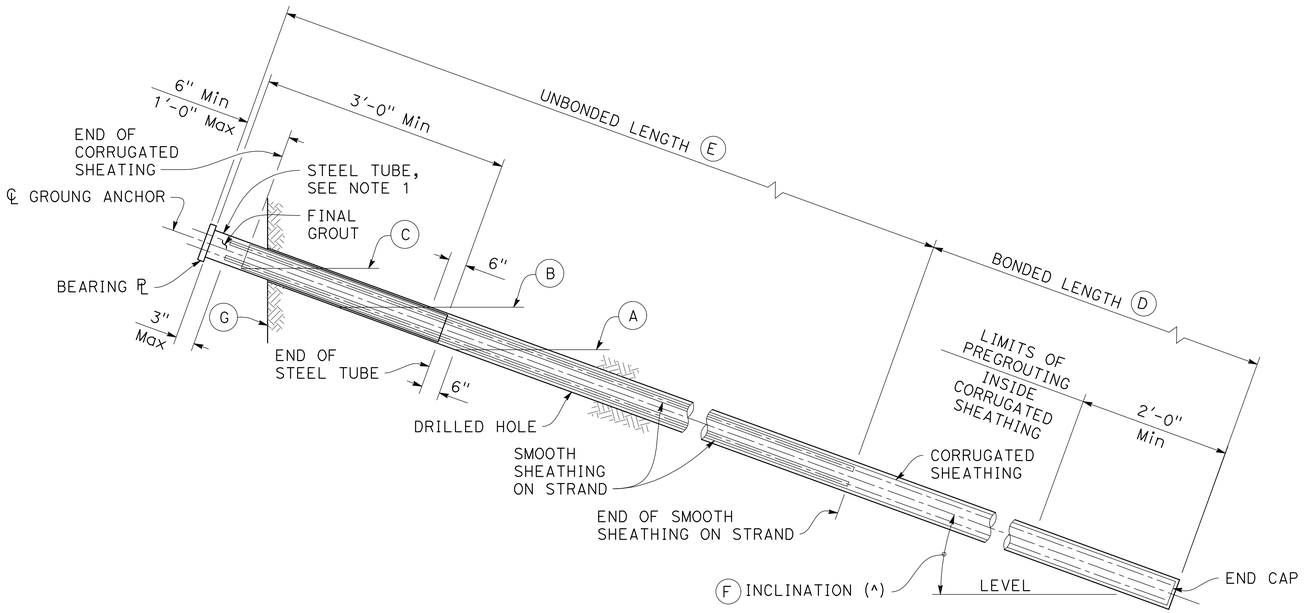

GROUND ANCHOR TENDON DETAIL (STRANDS)

NO SCALE

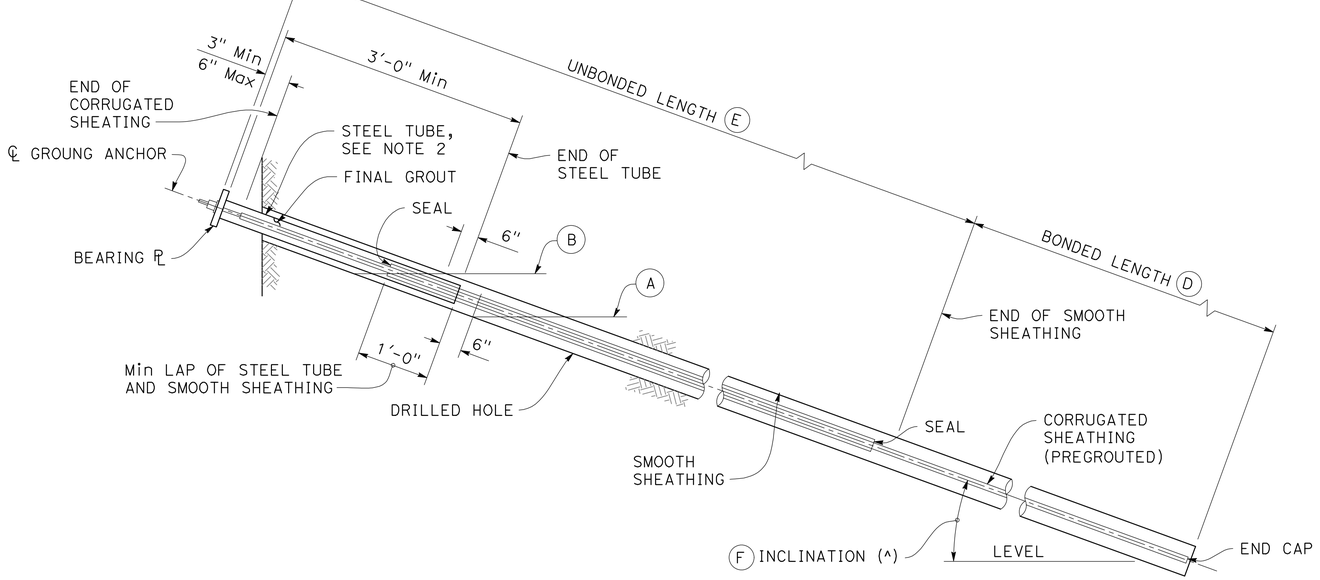

GROUND ANCHOR TENDON DETAIL (BARS)

NO SCALE

NOTES:

(A) Level of initial grouting for drilled hole 6" in diameter or smaller

(B) Level of secondary grouting

(C) Level of initial grouting inside corrugated sheathing

(D) Bonded length shall be determined by the contractor

(E) For unbonded length, see "SHGA WALL DETAILS No. 1" sheet

(F) For inclination, see "SHGA WALL DETAILS No. 1" sheet

(G) Face of wall excavation

NOTES:

1. Steel tube (Min thickness = 1/4") welded to bearing plate. Galvanize assembly after fabrication.
2. Steel tube welded to bearing plate. Inside diameter of steel tube (Min thickness = 1/4") to be 1" greater than outside diameter of smooth sheathing.
3. Galvanize assembly after fabrication.
4. Minimum bearing plate size 12"x12"x1 1/2". Galvanize bearing plate after fabrication.
5. Place bearing plate normal to the center line of anchors.

GENERAL NOTES:

PRESTRESSING STEEL:

BARS - ASTM DESIGNATION: A722 TYPE II (150 ksi)

STAND TENDONS - ASTM DESIGNATION: A416

(270 ksi LOW RELAXATION STEEL)

FTL = FACTORED TEST LOAD PER ANCHOR (Kips)

fpu = MINIMUM TENSILE STRENGTH OF PRESTRESSING STEEL

As = MINIMUM CROSS SECTIONAL AREA OF PRESTRESSING STEEL IN GROUND ANCHOR (SQUARE INCH)

$$As(min) = \frac{1.0\ FTL}{0.75\ fpu} \quad \text{(STRANDS)}$$

$$As(min) = \frac{1.0\ FTL}{0.8\ fpu} \quad \text{(BARS)}$$

Dist	COUNTY	ROUTE	POST MILES TOTAL PROJECT	SHEET No.	TOTAL SHEETS
5	SCR	1	8.1/10.7	####	####

REGISTERED CIVIL ENGINEER DATE

PLANS APPROVAL DATE

REGISTERED PROFESSIONAL ENGINEER — JON ROBERT SAMPSON — No. 4344 — Exp. 3/31/25 — STRUCTURAL — STATE OF CALIFORNIA

THE STATE OF CALIFORNIA OR ITS OFFICERS OR AGENTS SHALL NOT BE RESPONSIBLE FOR THE ACCURACY OR COMPLETENESS OF SCANNED COPIES OF THIS PLAN SHEET.

SCCRTC
1523 PACIFIC AVE
SANTA CRUZ, CA 95060

MARK THOMAS
701 UNIVERSITY AVE, STE 200
SACRAMENTO, CA 95825

DRAFT - NOT FOR CONSTRUCTION

X DESIGN OVERSIGHT	DESIGN	BY M. MOORE	CHECKED X	PREPARED FOR THE STATE OF CALIFORNIA DEPARTMENT OF TRANSPORTATION	J. SAMPSON PROJECT ENGINEER
X SIGN OFF DATE	DETAILS	BY J. VALENZUELA	CHECKED X		BRIDGE No. 36-XXXX
	QUANTITIES	BY X	CHECKED X		POST MILE X

RETAINING WALL No. 101

SHGA WALL DETAILS No. 2

STRUCTURES DESIGN DETAIL SHEET (ENGLISH) (REVISION 8/16/2021)

DATE PLOTTED => 8/7/2024 TIME PLOTTED => 12:25 PM
FILE => RW101_09_SHD2.dwg USERNAME => JVALENZUELA

ORIGINAL SCALE IN INCHES FOR REDUCED PLANS 0 1 2 3

PROJECT NUMBER & PHASE: 05200000831 COUNTY/ROUTE: SCR/1 CONTRACT No.: 05-0C734

DISREGARD PRINTS BEARING EARLIER REVISION DATES

REVISION DATES | SHEET 9 | OF 16

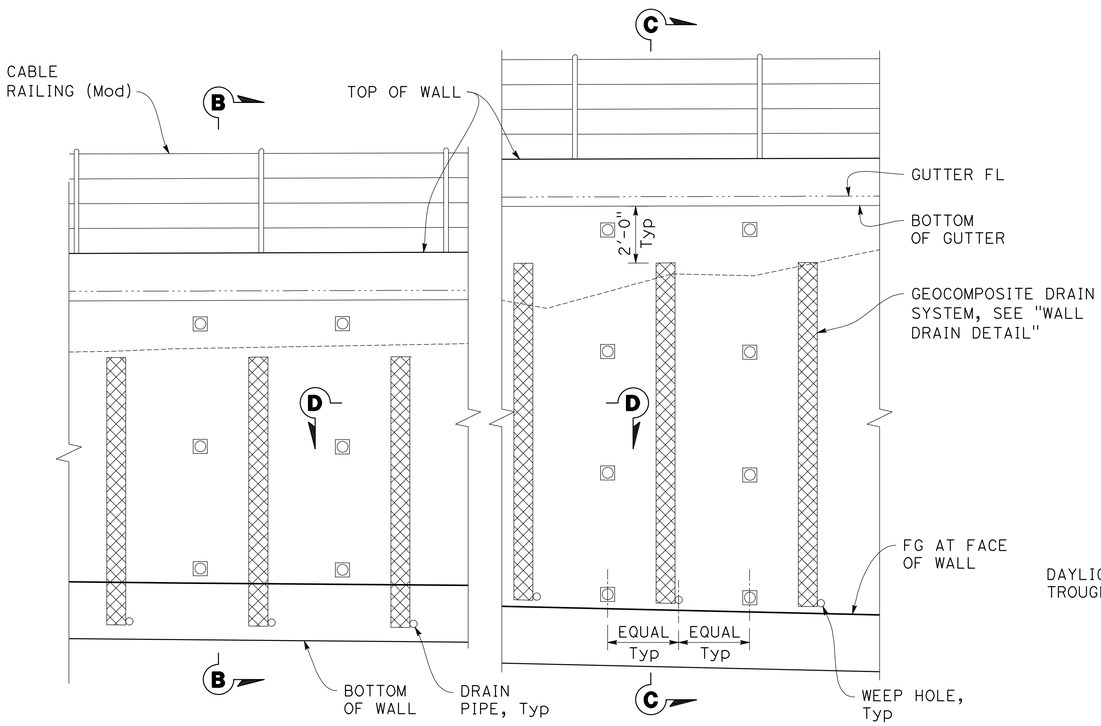

Sta 10+00.00 TO 13+97.84 Sta 13+97.84 TO 15+00.00

PART RETAINING WALL ELEVATION

3/8" = 1'-0"

Note:
For soldier pile wall drainage, see "SOLDIER PILE WALL DETAILS No. 4" sheet.

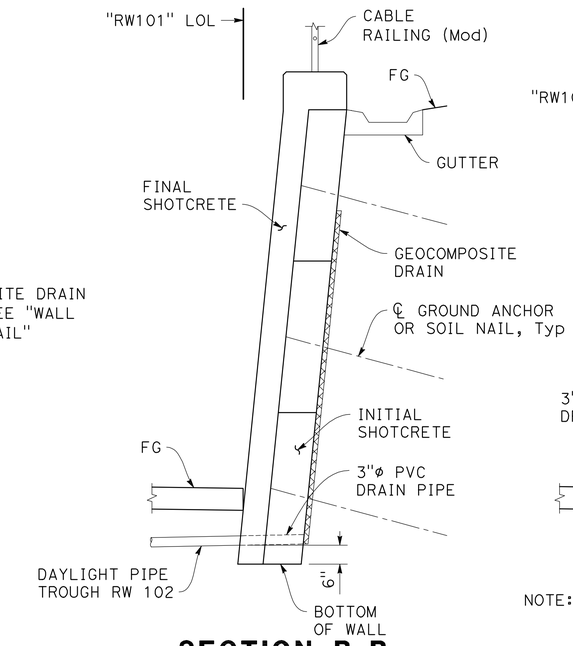

SECTION B-B

1/2" = 1'-0"

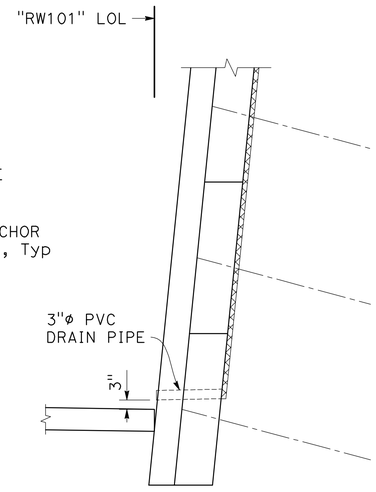

NOTE: For details not shown, see "SECTION B-B".

SECTION C-C

1/2" = 1'-0"

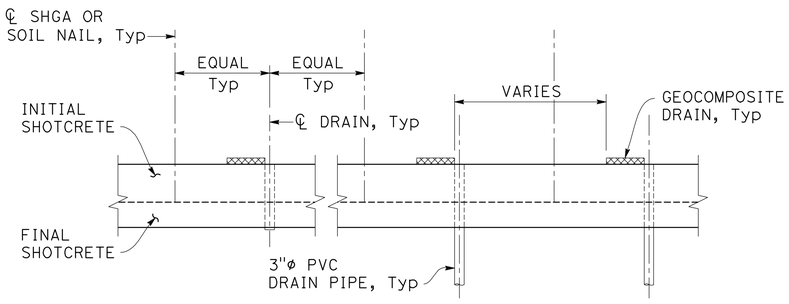

SECTION D-D

1/2" = 1'-0"

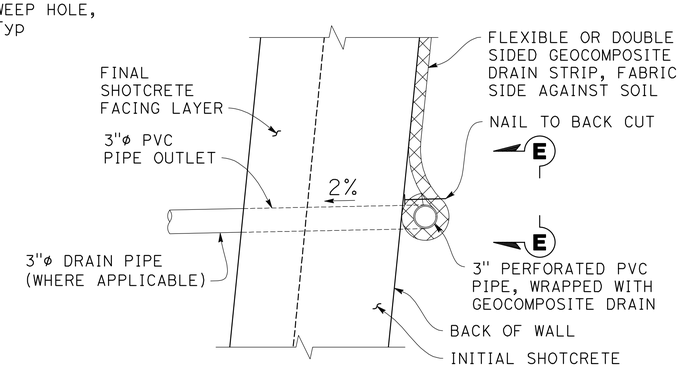

WALL DRAIN DETAIL OPTION A

NO SCALE

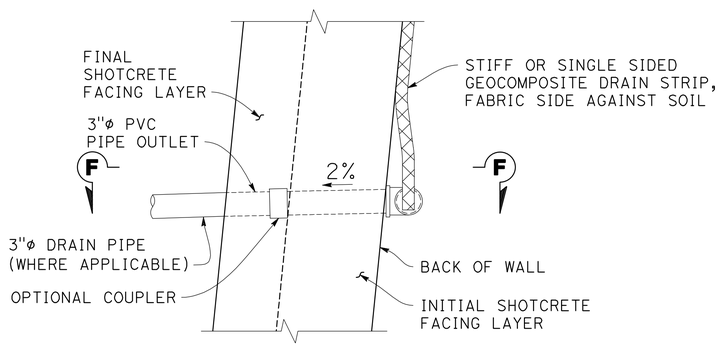

WALL DRAIN DETAIL OPTION B

NO SCALE

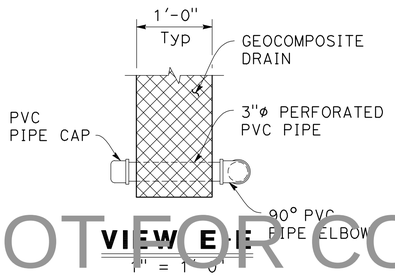

VIEW E-E

1" = 1'-0"

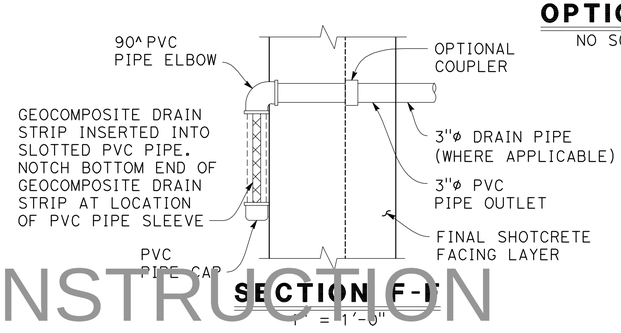

SECTION F-F

1" = 1'-0"

DRAFT - NOT FOR CONSTRUCTION

Dist	COUNTY	ROUTE	POST MILES TOTAL PROJECT	SHEET No.	TOTAL SHEETS
5	SCR	1	8.1/10.7	####	#####

REGISTERED CIVIL ENGINEER DATE

PLANS APPROVAL DATE

REGISTERED PROFESSIONAL ENGINEER — JON ROBERT SAMPSON — No. 4344 — Exp. 3/31/25 — STRUCTURAL — STATE OF CALIFORNIA

THE STATE OF CALIFORNIA OR ITS OFFICERS OR AGENTS SHALL NOT BE RESPONSIBLE FOR THE ACCURACY OR COMPLETENESS OF SCANNED COPIES OF THIS PLAN SHEET.

SCCRTC
1523 PACIFIC AVE
SANTA CRUZ, CA 95060

MARK THOMAS
701 UNIVERSITY AVE, STE 200
SACRAMENTO, CA 95825

X
DESIGN OVERSIGHT
X
SIGN OFF DATE

	BY	CHECKED
DESIGN	M. MOORE	X
DETAILS	J. VALENZUELA	X
QUANTITIES	X	X

PREPARED FOR THE STATE OF CALIFORNIA DEPARTMENT OF TRANSPORTATION

J. SAMPSON
PROJECT ENGINEER

BRIDGE No. 36-XXXX
POST MILE X

RETAINING WALL No. 101
WALL DRAINAGE DETAILS

STRUCTURES DESIGN DETAIL SHEET (ENGLISH) (REVISION 8/16/2021)
DATE PLOTTED => 8/7/2024
FILE => RW101_10_WD.dwg
TIME PLOTTED => 12:26 PM
USERNAME => JVALENZUELA
ORIGINAL SCALE IN INCHES FOR REDUCED PLANS 0 1 2 3
PROJECT NUMBER & PHASE: 05200000831
COUNTY/ROUTE: SCR/1
CONTRACT No.: 05-0C734
DISREGARD PRINTS BEARING EARLIER REVISION DATES
REVISION DATES
SHEET 10 OF 16

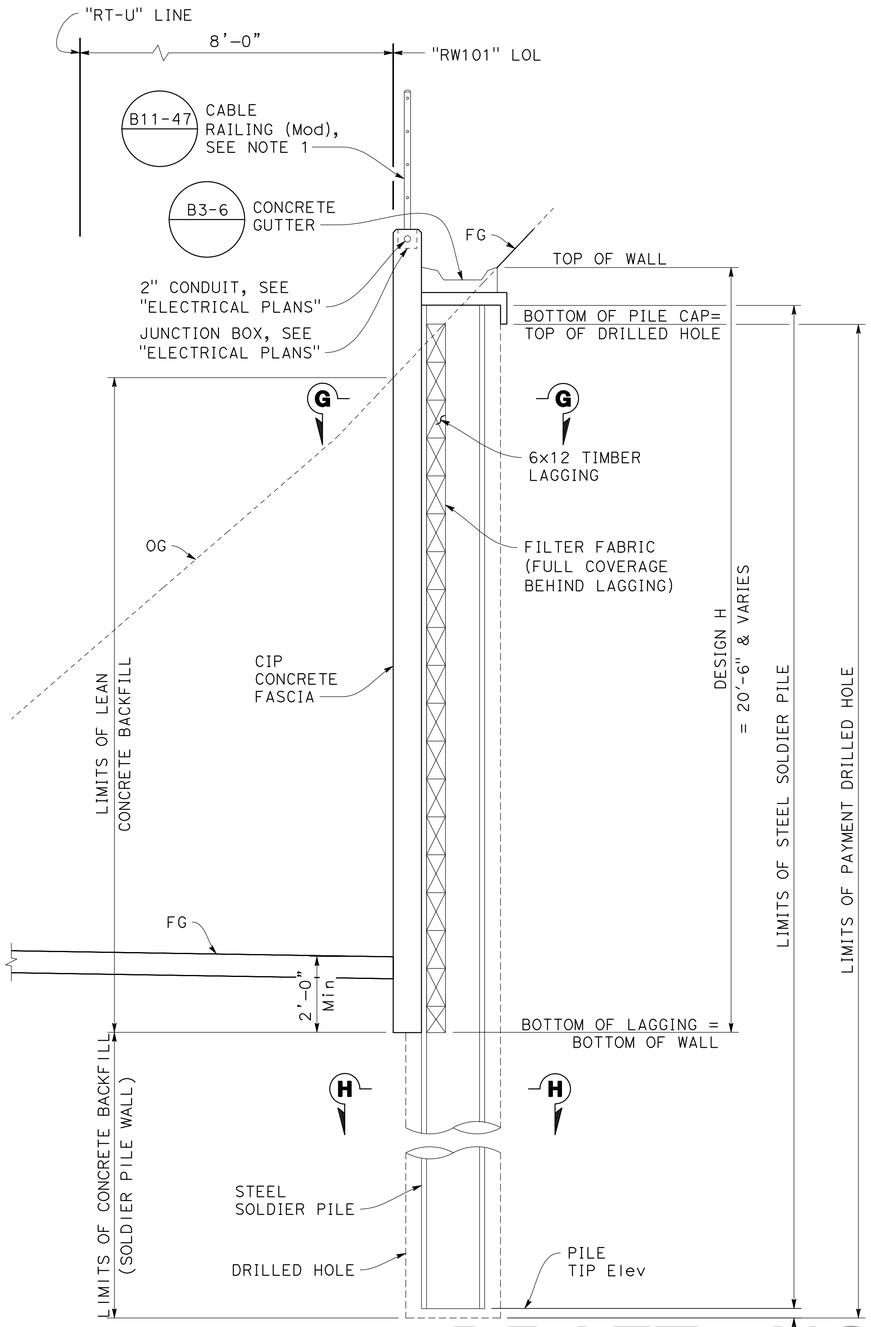

TYPICAL SECTION

1" = 2'

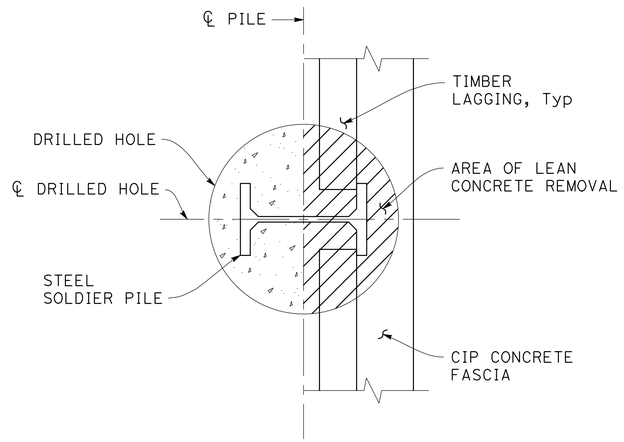

SECTION G-G

SCALE

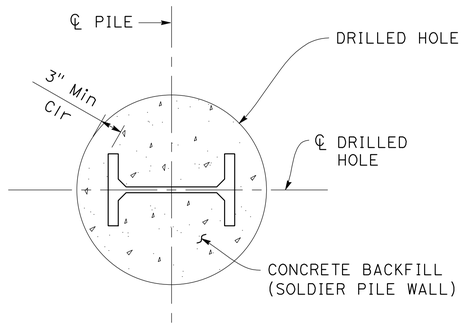

SECTION H-H

SCALE

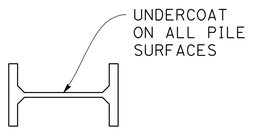

LIMITS OF CLEAN AND PAINT STEEL SOLDIER PILE

NOTE: Clean and paint Full Length of Steel Soldier Pile.

Dist	COUNTY	ROUTE	POST MILES TOTAL PROJECT	SHEET No.	TOTAL SHEETS
5	SCR	1	8.1/10.7	####	####

REGISTERED CIVIL ENGINEER DATE

PLANS APPROVAL DATE

REGISTERED PROFESSIONAL ENGINEER — JON ROBERT SAMPSON — No. 4344 — Exp. 3/31/25 — STRUCTURAL — STATE OF CALIFORNIA

THE STATE OF CALIFORNIA OR ITS OFFICERS OR AGENTS SHALL NOT BE RESPONSIBLE FOR THE ACCURACY OR COMPLETENESS OF SCANNED COPIES OF THIS PLAN SHEET.

SCCRTC
1523 PACIFIC AVE
SANTA CRUZ, CA 95060

MARK THOMAS
701 UNIVERSITY AVE, STE 200
SACRAMENTO, CA 95825

NOTES:

1. All posts, braces, cables and hardware to be galvanized and natina stained. See Project Specifications for more information.

PILE DATA TABLE

Pile Line	Station	Pile Section	Drilled Hole Dia.	Pile Tip Elev.	Top of Wall Elev.	Bot. of Wall Elev.
97	15+02.75	W36x300	48	92.00	144.37	123.50
98	15+10.75	W36x300	48	92.00	144.39	123.50
99	15+18.75	W36x359	48	90.00	144.41	123.50
100	15+26.75	W36x359	48	90.00	144.43	122.50
101	15+34.75	W36x359	48	90.00	144.46	122.50
102	15+42.75	W36x359	48	88.00	144.48	122.50
103	15+50.75	W36x359	48	88.00	144.47	122.50
104	15+58.75	W36x359	48	88.00	144.22	122.50
105	15+66.75	W36x359	48	88.00	143.97	121.50
106	15+74.75	W36x359	48	87.00	143.72	121.50
107	15+82.75	W36x359	48	87.00	143.46	121.50
108	15+90.75	W36x328	48	87.00	143.21	121.50
109	15+98.75	W36x328	48	87.00	142.96	121.50
110	16+06.75	W36x328	48	86.00	142.71	121.50
111	16+14.75	W36x328	48	86.00	142.46	120.50
112	16+22.75	W36x328	48	86.00	142.21	120.50
113	16+30.75	W36x260	48	89.00	140.55	120.50
114	16+38.75	W36x260	48	92.00	138.30	120.50
115	16+46.75	W36x150	48	96.00	136.30	120.50
116	16+54.75	W36x150	48	100.00	134.17	119.50
117	16+62.75	W24x94	36	103.00	132.05	119.50
118	16+70.75	W24x94	36	106.00	129.92	119.50
119	16+78.75	W24x94	36	110.00	127.80	119.50
120	16+86.75	W24x94	36	112.00	125.67	119.50
121	16+94.75	W24x94	36	112.00	123.55	119.50

DRAFT - NOT FOR CONSTRUCTION

X
DESIGN OVERSIGHT
X
SIGN OFF DATE

	BY	CHECKED
DESIGN	M. MOORE	X
DETAILS	J. VALENZUELA	X
QUANTITIES	X	X

PREPARED FOR THE STATE OF CALIFORNIA DEPARTMENT OF TRANSPORTATION

J. SAMPSON
PROJECT ENGINEER

BRIDGE No. 36-XXXX
POST MILE X

RETAINING WALL No. 101

SOLDIER PILE WALL DETAILS No.1

STRUCTURES DESIGN DETAIL SHEET (ENGLISH) (REVISION 8/16/2021)

DATE PLOTTED => 8/7/2024
FILE => RW101_11_SDT1.dwg
TIME PLOTTED => 12:29 PM
USERNAME => JVALENZUELA

ORIGINAL SCALE IN INCHES FOR REDUCED PLANS 0 1 2 3

PROJECT NUMBER & PHASE: 05200000831
COUNTY/ROUTE: SCR/1
CONTRACT No.: 05-0C734

DISREGARD PRINTS BEARING EARLIER REVISION DATES

REVISION DATES

SHEET 11 OF 16

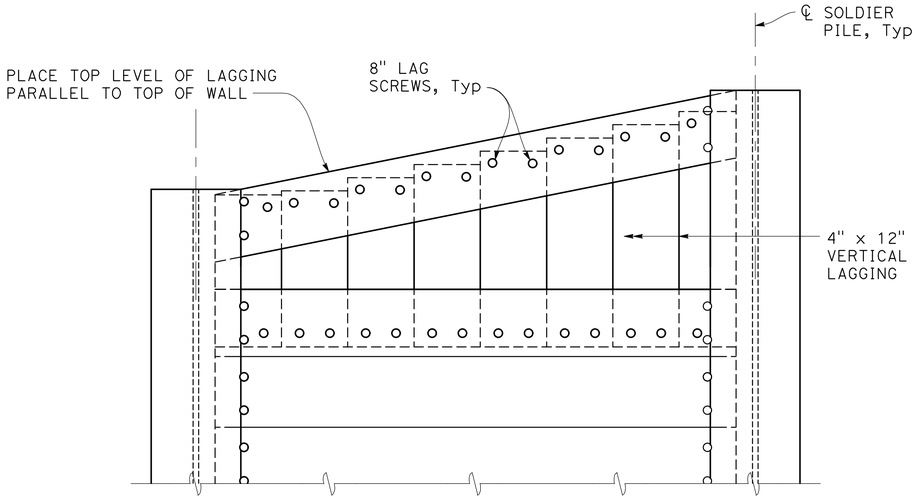

PART ELEVATION

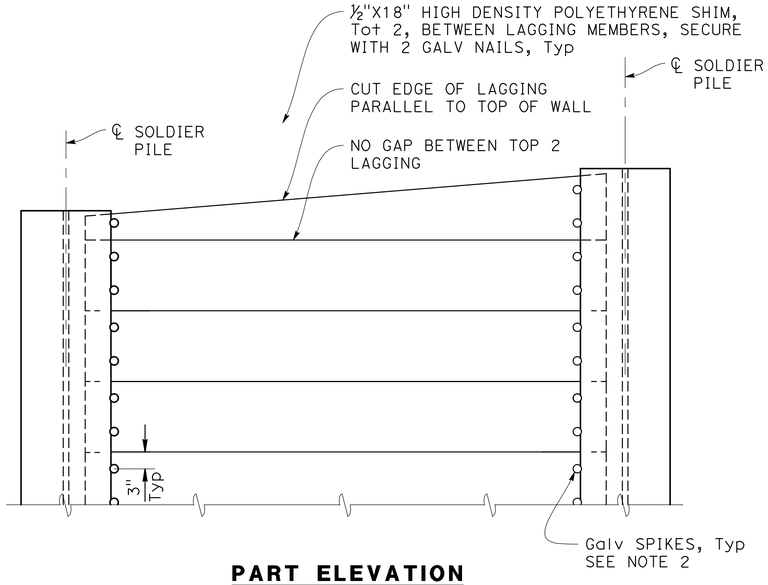

PART ELEVATION

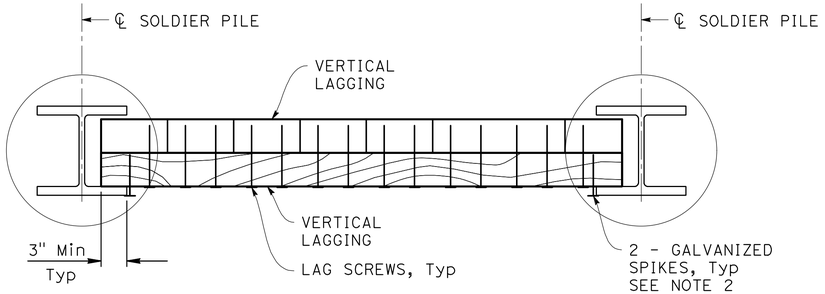

PART PLAN

LAGGING DETAILS (ALTERNATIVE 2)

NO SCALE

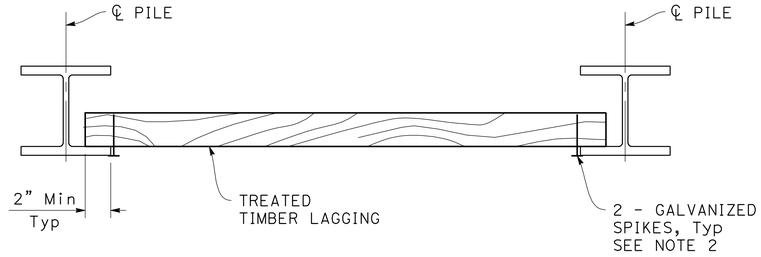

PART PLAN

LAGGING DETAILS

NO SCALE

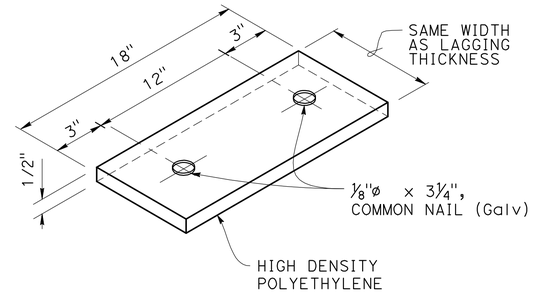

SHIM DETAIL

NO SCALE

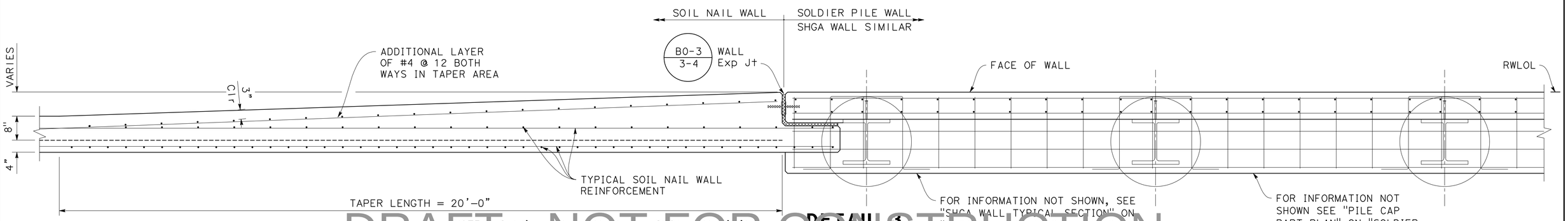

NOTE: Soldier pile wall shown, SHGA wall similar.

DETAIL 3

3/4" = 1'-0"

NOTES:

1. No clipping of timber lagging corners allowed.
2. Use 16d Galv wire spikes for 6" x 12" lagging.
3. Spikes shall not be bent.

Dist	COUNTY	ROUTE	POST MILES TOTAL PROJECT	SHEET No.	TOTAL SHEETS
5	SCR	1	8.1/10.7	####	####

REGISTERED CIVIL ENGINEER — DATE

PLANS APPROVAL DATE

REGISTERED PROFESSIONAL ENGINEER — JON ROBERT SAMPSON — No. 4344 — Exp. 3/31/25 STRUCTURAL — STATE OF CALIFORNIA

THE STATE OF CALIFORNIA OR ITS OFFICERS OR AGENTS SHALL NOT BE RESPONSIBLE FOR THE ACCURACY OR COMPLETENESS OF SCANNED COPIES OF THIS PLAN SHEET.

SCCRTC
1523 PACIFIC AVE
SANTA CRUZ, CA 95060

MARK THOMAS
701 UNIVERSITY AVE, STE 200
SACRAMENTO, CA 95825

DRAFT - NOT FOR CONSTRUCTION

X
DESIGN OVERSIGHT
X
SIGN OFF DATE

	BY	CHECKED
DESIGN	M. MOORE	X
DETAILS	J. VALENZUELA	X
QUANTITIES	X	X

PREPARED FOR THE STATE OF CALIFORNIA DEPARTMENT OF TRANSPORTATION

J. SAMPSON
PROJECT ENGINEER

BRIDGE No. 36-XXXX
POST MILE X

RETAINING WALL No. 101

SOLDIER PILE WALL DETAILS No.2

STRUCTURES DESIGN DETAIL SHEET (ENGLISH) (REVISION 8/16/2021)

DATE PLOTTED => 8/7/2024
FILE => RW101_12_SDT2.dwg

TIME PLOTTED => 12:30 PM
USERNAME => JVALENZUELA

ORIGINAL SCALE IN INCHES FOR REDUCED PLANS 0 1 2 3

PROJECT NUMBER & PHASE: 05200000831

COUNTY/ROUTE: SCR/1
CONTRACT No.: 05-0C734

DISREGARD PRINTS BEARING EARLIER REVISION DATES →

REVISION DATES

SHEET 12 OF 16

Dist	COUNTY	ROUTE	POST MILES TOTAL PROJECT	SHEET No.	TOTAL SHEETS
5	SCR	1	8.1/10.7	####	####

REGISTERED CIVIL ENGINEER DATE

PLANS APPROVAL DATE

REGISTERED PROFESSIONAL ENGINEER — JON ROBERT SAMPSON — No. 4344 — Exp. 3/31/25 STRUCTURAL — STATE OF CALIFORNIA

THE STATE OF CALIFORNIA OR ITS OFFICERS OR AGENTS SHALL NOT BE RESPONSIBLE FOR THE ACCURACY OR COMPLETENESS OF SCANNED COPIES OF THIS PLAN SHEET.

SCCRTC
1523 PACIFIC AVE
SANTA CRUZ, CA 95060

MARK THOMAS
701 UNIVERSITY AVE, STE 200
SACRAMENTO, CA 95825

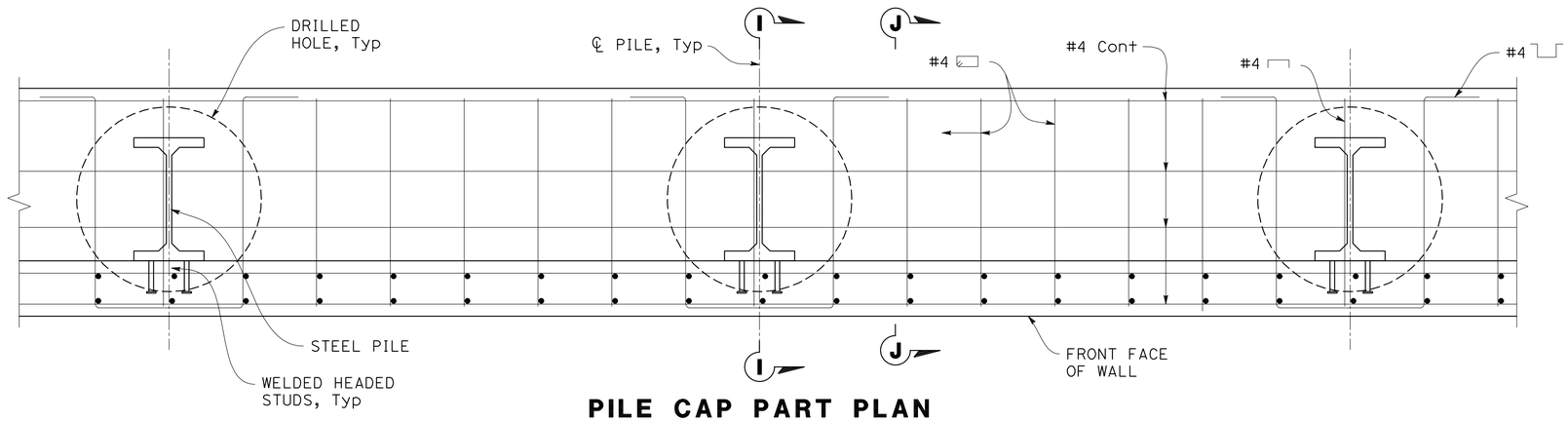

PILE CAP PART PLAN

1" = 1'-0"

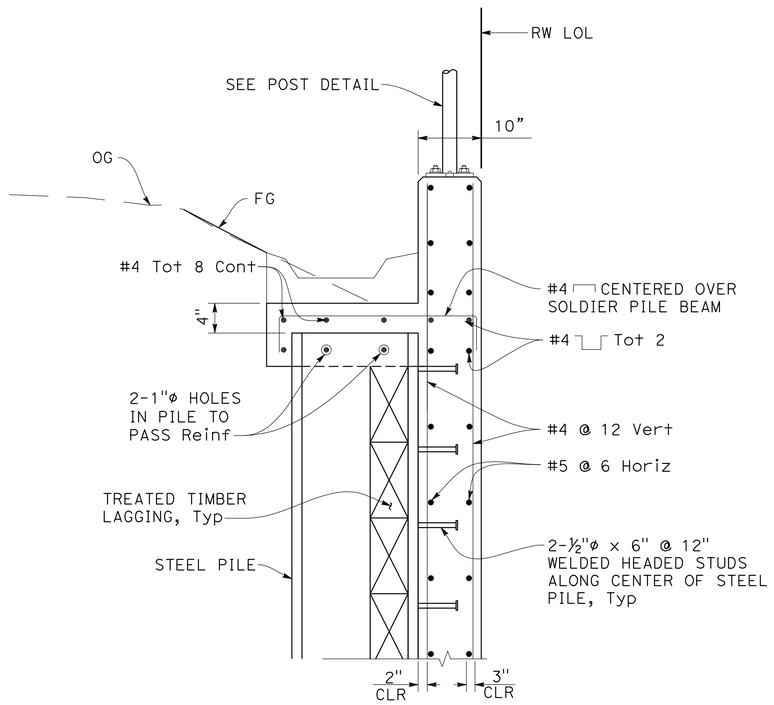

SECTION I-I

1" = 1'-0"

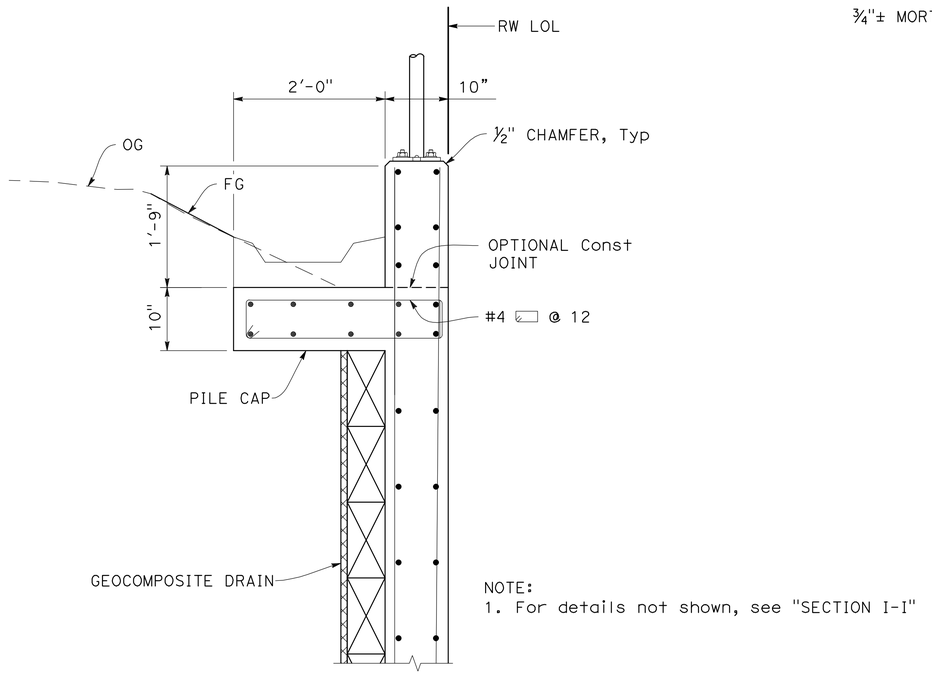

NOTE:
1. For details not shown, see "SECTION I-I"

SECTION J-J

1" = 1'-0"

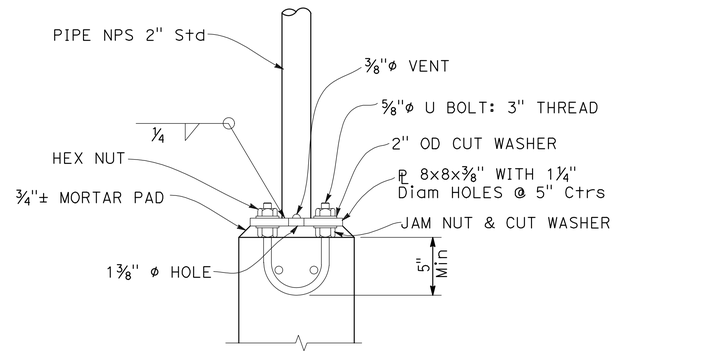

POST DETAIL

NO SCALE

DRAFT - NOT FOR CONSTRUCTION

X DESIGN OVERSIGHT X SIGN OFF DATE		DESIGN	BY M. MOORE	CHECKED X	PREPARED FOR THE STATE OF CALIFORNIA DEPARTMENT OF TRANSPORTATION	J. SAMPSON PROJECT ENGINEER	BRIDGE No. 36-XXXX POST MILE X	RETAINING WALL No. 101
		DETAILS	BY J. VALENZUELA	CHECKED X				SOLDIER PILE WALL DETAILS No. 3
		QUANTITIES	BY X	CHECKED X				

STRUCTURES DESIGN DETAIL SHEET (ENGLISH) (REVISION 8/16/2021)

DATE PLOTTED => 8/7/2024 TIME PLOTTED => 12:31 PM
FILE => RW101_13_SDT3.dwg USERNAME => JVALENZUELA

ORIGINAL SCALE IN INCHES FOR REDUCED PLANS 0 1 2 3

PROJECT NUMBER & PHASE: 05200000831 COUNTY/ROUTE: SCR/1 CONTRACT No.: 05-0C734

DISREGARD PRINTS BEARING EARLIER REVISION DATES →

REVISION DATES				SHEET	OF
				13	16

Dist	COUNTY	ROUTE	POST MILES TOTAL PROJECT	SHEET No.	TOTAL SHEETS
5	SCR	1	8.1/10.7	####	#####

REGISTERED CIVIL ENGINEER DATE

PLANS APPROVAL DATE

REGISTERED PROFESSIONAL ENGINEER — JON ROBERT SAMPSON — No. 4344 — Exp. 3/31/25 — STRUCTURAL — STATE OF CALIFORNIA

THE STATE OF CALIFORNIA OR ITS OFFICERS OR AGENTS SHALL NOT BE RESPONSIBLE FOR THE ACCURACY OR COMPLETENESS OF SCANNED COPIES OF THIS PLAN SHEET.

SCCRTC
1523 PACIFIC AVE
SANTA CRUZ, CA 95060

MARK THOMAS
701 UNIVERSITY AVE, STE 200
SACRAMENTO, CA 95825

NOTE:
PLACE WEEP HOLE MIDWAY
BETWEEN ℄ PILES

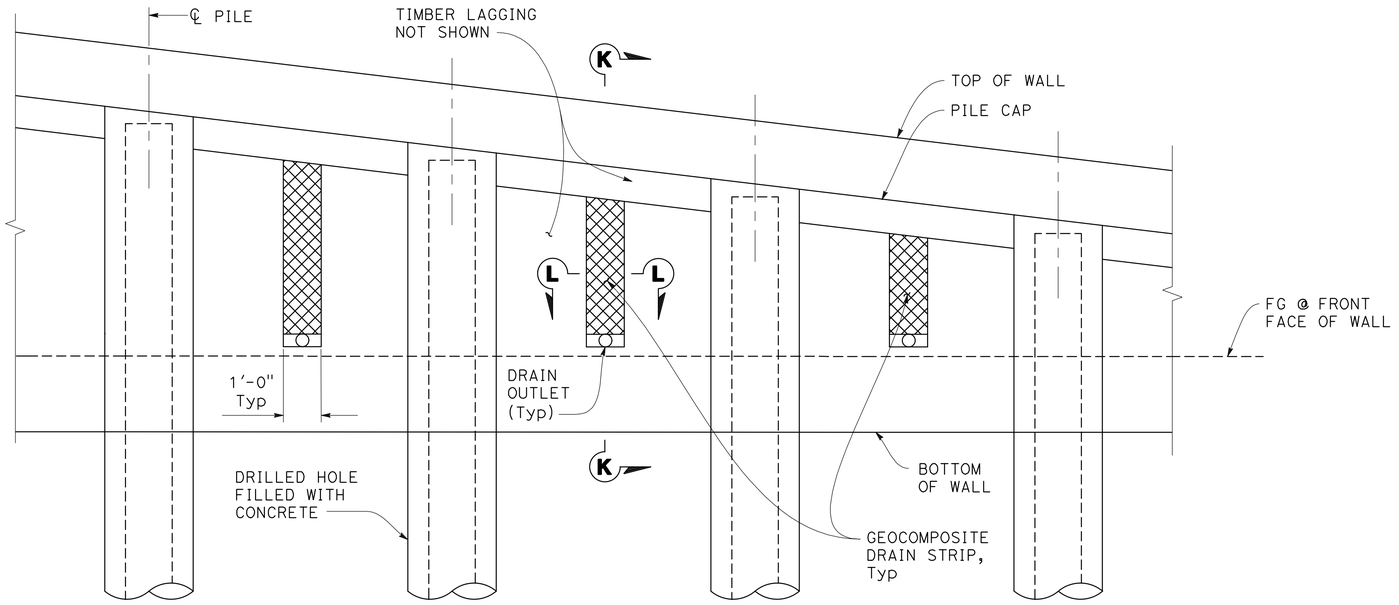

ELEVATION - GEOCOMPOSITE

NO SCALE

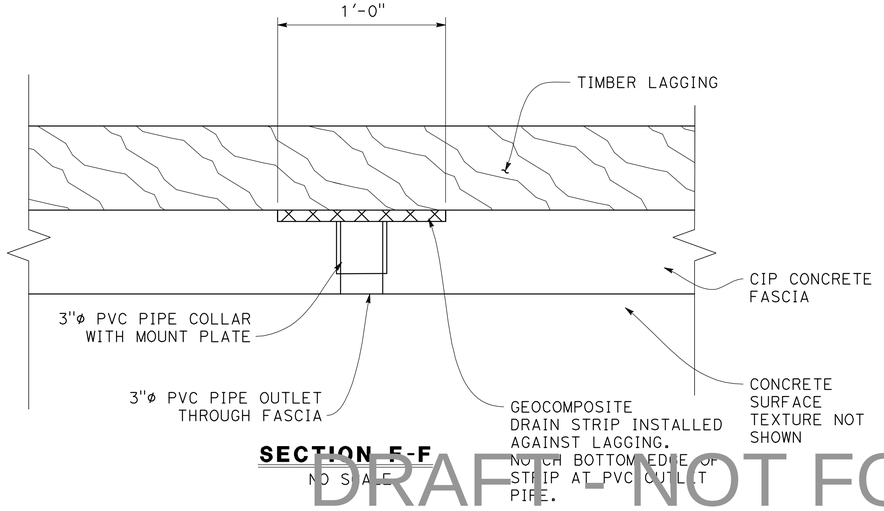

SECTION E-E

NO SCALE

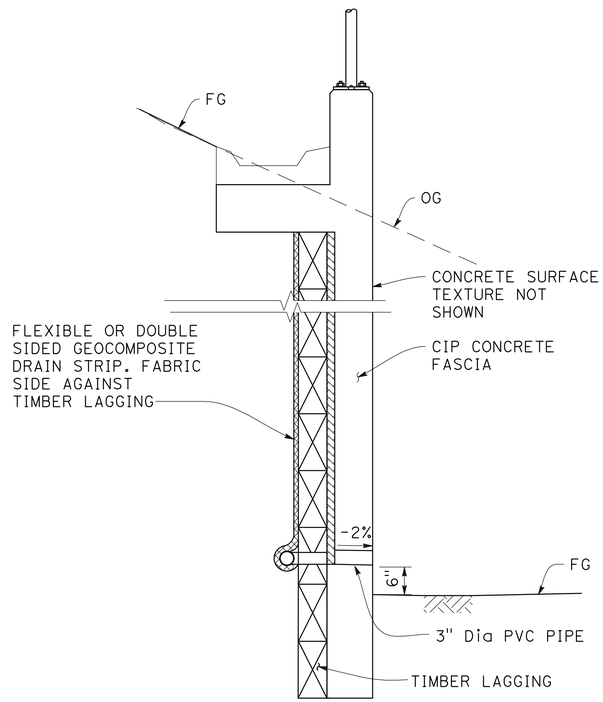

SECTION K-K

NO SCALE

DRAFT - NOT FOR CONSTRUCTION

X DESIGN OVERSIGHT X SIGN OFF DATE		DESIGN	BY M. MOORE	CHECKED X	PREPARED FOR THE STATE OF CALIFORNIA DEPARTMENT OF TRANSPORTATION	J. SAMPSON PROJECT ENGINEER	BRIDGE No. 36-XXXX POST MILE X	RETAINING WALL No. 101 SOLDIER PILE WALL DETAILS No. 4
		DETAILS	BY J. VALENZUELA	CHECKED X				
		QUANTITIES	BY X	CHECKED X				

STRUCTURES DESIGN DETAIL SHEET (ENGLISH) (REVISION 8/16/2021)

DATE PLOTTED => 8/7/2024
FILE => RW101_14_SDT4.dwg

TIME PLOTTED => 12:31 PM
USERNAME => JVALENZUELA

ORIGINAL SCALE IN INCHES FOR REDUCED PLANS 0 1 2 3

PROJECT NUMBER & PHASE: 05200000831

COUNTY/ROUTE: SCR/1
CONTRACT No.: 05-0C734

DISREGARD PRINTS BEARING EARLIER REVISION DATES →

REVISION DATES

SHEET 14 OF 16

DIST	COUNTY	ROUTE	POST MILES TOTAL PROJECT	SHEET No	TOTAL SHEETS
05	SCR	1	8.1/10.7		

GEOTECHNICAL PROFESSIONAL DATE

PLANS APPROVAL DATE

REGISTERED PROFESSIONAL ENGINEER — No. — Exp. GEOTECHNICAL — STATE OF CALIFORNIA

The State of California or its officers or agents shall not be responsible for the accuracy or completeness of scanned copies of this plan sheet.

MARK THOMS
701 UNIVERSITY AVE, STE 200
SACRAMENTO, CA 95825

PARIKH CONSULTANTS, INC.
1497 N MILPITAS BLVD.
MILPITAS, CA 95035

DRAFT

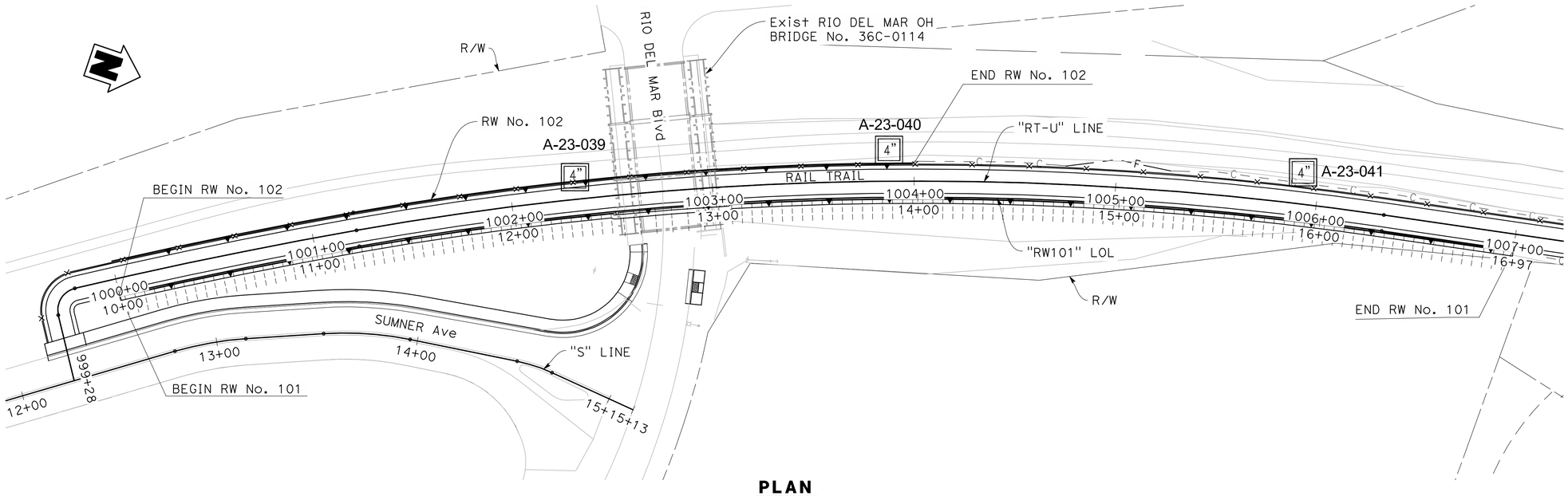

PLAN
1′ = 30′

DRAFT - NOT FOR CONSTRUCTION

DESIGN OVERSIGHT	DRAWN BY	KIM OUYANG	L. BHANGOO, C. LANGBEIN, M. MCKEE	PREPARED FOR THE STATE OF CALIFORNIA DEPARTMENT OF TRANSPORTATION	KANDEEPAN SARAVANAPAVAN	BRIDGE NO. 36EXXX3	RETAINING WALL No. 101 & 102
SIGN OFF DATE	CHECKED BY	KRISHNA ADHIKARI	FIELD INVESTIGATION BY: DATE: DEC 2022 TO MAR 2023		PROJECT ENGINEER	POST MILES X.XX	LOG OF TEST BORING 1 OF 2

GS GEOTECHNICAL LOG OF TEST BORINGS SHEET (ENGLISH) (REV. 03/14/12)

ORIGINAL SCALE IN INCHES FOR REDUCED PLANS 0 1 2 3

UNIT: PROJECT NUMBER & PHASE: 0518000116 CONTRACT NO.: 05-0C7340

DISREGARD PRINTS BEARING EARLIER REVISION DATES →

REVISION DATES					SHEET	OF
					15	16

FILE => $REQUEST

USERNAME => $USER DATE PLOTTED => $DATE TIME PLOTTED => $TIME

NOTES:

Standard Penetration Test Sampler: I.D. = 1.4"; O.D. = 2" Modified California Sampler: I.D. = 2.5"; O.D. = 3" Hammer Assembly: A 140 lb hammer with a 30" drop (Automatic Hammer)

This LOTB sheet was prepared in accordance with the Caltrans Soil & Rock, Logging, Classification, and Presentation Manual (2010)

See Caltrans 2022 Standard Plans A10F, A10G for Soil Legend.

All dimensions are in feet unless otherwise shown

BOREHOLE LOCATION TABLE

Hole ID	Alignment Name	Station and Offset
A-23-039	"RT-U" Line	1002+33 10' Lt.
A-23-040	"RT-U" Line	1003+88 16' Lt.
A-23-041	"RT-U" Line	1005+92 16' Lt.

DIST	COUNTY	ROUTE	POST MILES TOTAL PROJECT	SHEET No	TOTAL SHEETS
05	SCR	1	8.1/10.7		

GEOTECHNICAL PROFESSIONAL DATE

PLANS APPROVAL DATE

REGISTERED PROFESSIONAL ENGINEER — No. — Exp. — GEOTECHNICAL — STATE OF CALIFORNIA

The State of California or its officers or agents shall not be responsible for the accuracy or completeness of scanned copies of this plan sheet.

MARK THOMS
701 UNIVERSITY AVE, STE 200
SACRAMENTO, CA 95825

PARIKH CONSULTANTS, INC.
1497 N MILPITAS BLVD.
MILPITAS, CA 95035

DRAFT

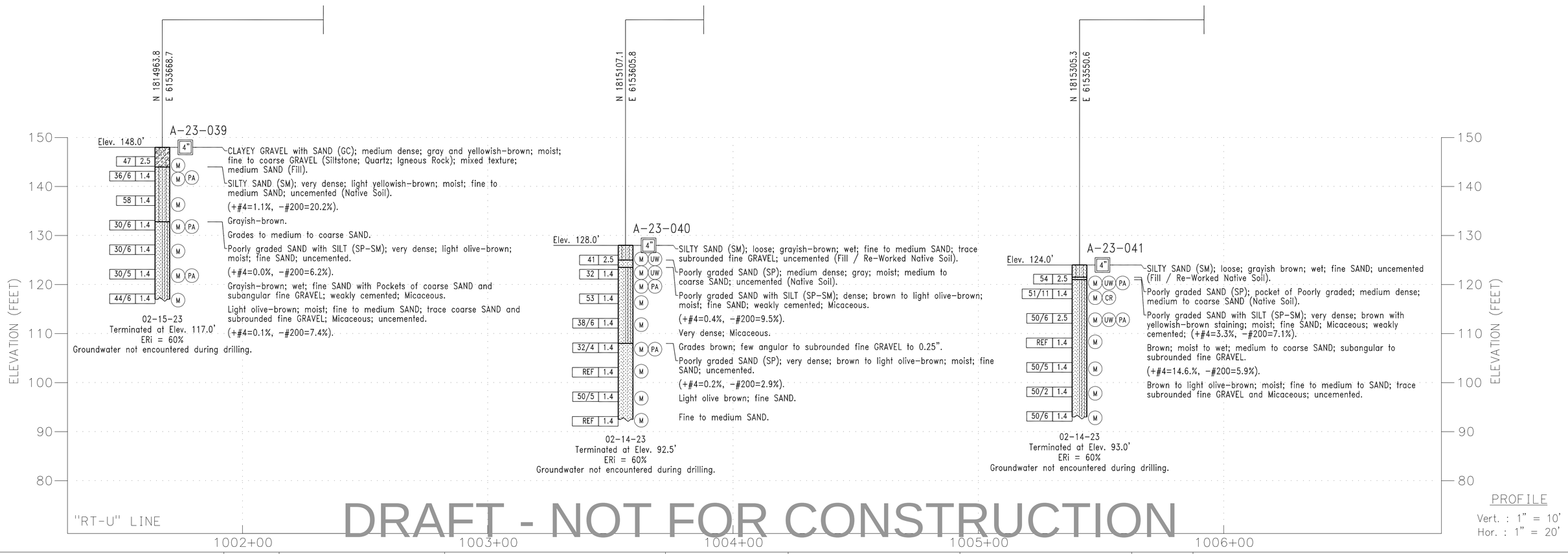

DRAFT - NOT FOR CONSTRUCTION

DESIGN OVERSIGHT	DRAWN BY	KIM OUYANG	L. BHANGOO, C. LANGBEIN, M. MCKEE	PREPARED FOR THE STATE OF CALIFORNIA DEPARTMENT OF TRANSPORTATION	KANDEEPAN SARAVANAPAVAN	BRIDGE NO. 36EXXX8	RETAINING WALL No. 101 & 102
SIGN OFF DATE	CHECKED BY	KRISHNA ADHIKARI	FIELD INVESTIGATION BY: DATE: DEC 2022 TO DEC 2023		PROJECT ENGINEER	POST MILES X.XX	LOG OF TEST BORINGS 2 OF 2

GS GEOTECHNICAL LOG OF TEST BORINGS SHEET (ENGLISH) (REV. 03/14/12)

ORIGINAL SCALE IN INCHES FOR REDUCED PLANS 0 1 2 3

UNIT:
PROJECT NUMBER & PHASE: 0518000116 CONTRACT NO.: 05-0C7340

DISREGARD PRINTS BEARING EARLIER REVISION DATES

REVISION DATES | SHEET 16 | OF 16

FILE => $REQUEST

USERNAME => $USER DATE PLOTTED => $DATE TIME PLOTTED => $TIME

Dist	COUNTY	ROUTE	POST MILES TOTAL PROJECT	SHEET No.	TOTAL SHEETS
5	SCR	1	8.1/10.7	852	931

REGISTERED CIVIL ENGINEER — DATE

PLANS APPROVAL DATE

REGISTERED PROFESSIONAL ENGINEER — MARSHALL EUGENE MOORE — No. S6557 — Exp. 9-30-25 — STRUCTURAL — STATE OF CALIFORNIA

THE STATE OF CALIFORNIA OR ITS OFFICERS OR AGENTS SHALL NOT BE RESPONSIBLE FOR THE ACCURACY OR COMPLETENESS OF SCANNED COPIES OF THIS PLAN SHEET.

SCCRTC
1523 PACIFIC AVE
SANTA CRUZ, CA 95060

MARK THOMAS
701 UNIVERSITY AVE, STE 200
SACRAMENTO, CA 95825

MSE WALL DESIGN DATA

H	7′-6"	5′-0"
BW (L)	9′-6" (8′-0")	9′-6" (8′-0")
STEEL SOIL REINFORCEMENT	TOP 4 - W15x15 @ 6 1 of 4 - W15x15 @ 6 Bot 4 - W15x15 @ 6	TOP 4 - W15x15 @ 6 Bot 4 - W15x15 @ 6

NOTES:

(40) Inspection Wire Location
Interval in years from the time of construction to the time of removal of inspection wire.

3 of 4 - W15 x W15 @ 6
3 of = 3 Levels of Reinforcement Mats with
4-W15 x = 4 Longitudinal Wires W15 sized by
W15 @ 6 = W15 sized Transverse Wires at 6-inch spacing

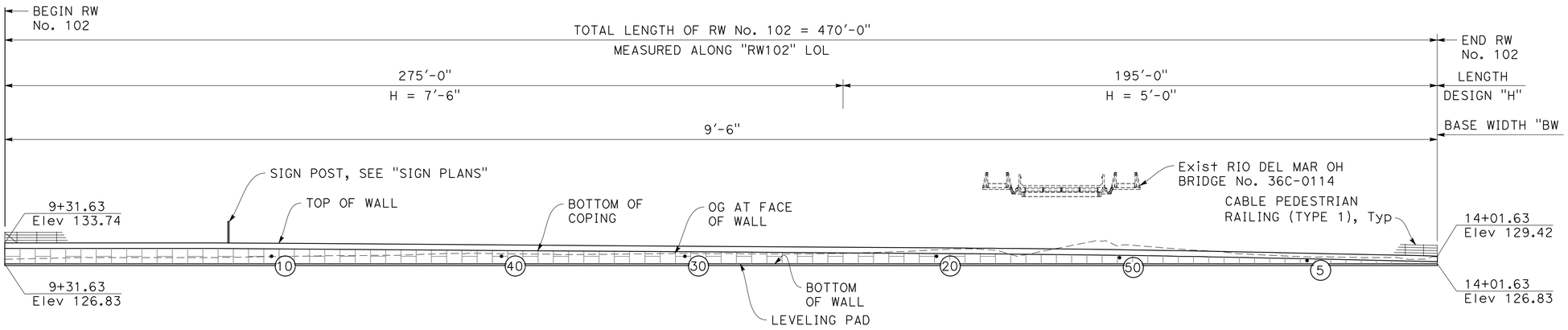

DEVELOPED MIRRORED ELEVATION

1′ = 20′

NOTES:

1. For Retaining Wall No. 101, see "RETAINING WALL No. 101 PLANS".
2. This plan accurate for retaining wall work only.
3. The contractor shall verify controlling field dimensions before ordering or fabricating any material.
4. "L" indicates Soil Reinforcement Length.

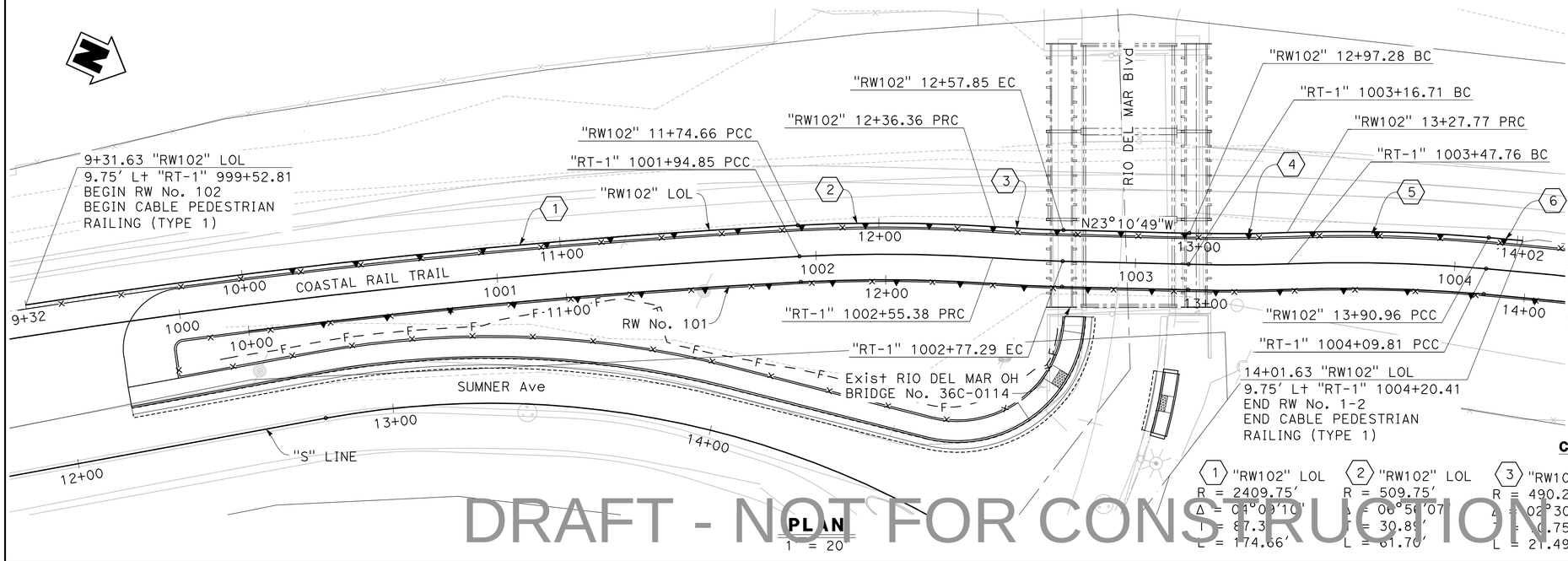

PLAN

1″ = 20′

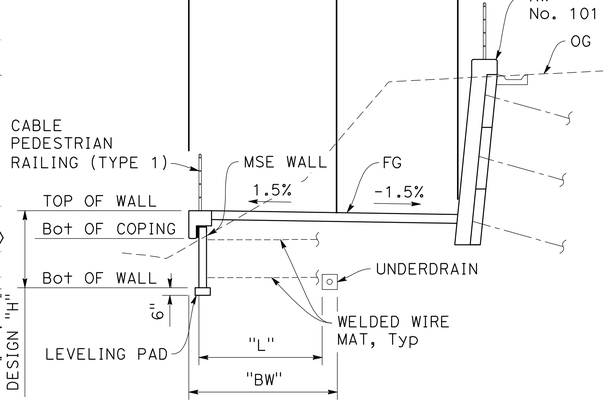

TYPICAL SECTION

1′ = 5′

CURVE DATA

(1) "RW102" LOL	(2) "RW102" LOL	(3) "RW102" LOL	(4) "RW102" LOL	(5) "RW102" LOL	(6) "RW102" LOL
R = 2409.75′	R = 509.75′	R = 490.25′	R = 490.25′	R = 509.75′	R = 1809.75′
Δ = 04°09′10"	Δ = 08°50′07"	Δ = 02°30′40"	Δ = 03°33′30"	Δ = 07°06′56"	Δ = 0°20′09"
T = 87.3′	T = 30.89′	T = 10.75′	T = 15.23′	T = 31.69′	T = 5.30′
L = 174.66′	L = 61.70′	L = 21.49′	L = 30.45′	L = 63.31′	L = 10.61′

DRAFT - NOT FOR CONSTRUCTION

DESIGN OVERSIGHT	DESIGN	BY T. FAIR/M. MOORE	CHECKED J. SAMPSON	SEISMIC ANALYSIS	BY X	CHECKED X	PREPARED FOR THE STATE OF CALIFORNIA DEPARTMENT OF TRANSPORTATION
	DETAILS	BY J. VALENZUELA	CHECKED M. MOORE	LAYOUT	BY M. MOORE	CHECKED J. SAMPSON	
SIGN OFF DATE	QUANTITIES	BY X	CHECKED X	SPECIFICATIONS	BY M. MOORE	PLANS AND SPECS COMPARED J. HICKEY	

M. MOORE
PROJECT ENGINEER

BRIDGE No. N/A
POST MILE N/A

RETAINING WALL No. 102

GENERAL PLAN

STRUCTURES DESIGN GENERAL PLAN SHEET (ENGLISH) (REVISION 2/8/2022)

DATE PLOTTED => 3/18/2025
FILE => RW102_01_GP.dwg

TIME PLOTTED => 6:35 AM
USERNAME => ETANAKA

ORIGINAL SCALE IN INCHES FOR REDUCED PLANS 0 1 2 3

PROJECT NUMBER & PHASE: 05200000831

COUNTY/ROUTE: SCR/1
CONTRACT No.: 05-0C734

DISREGARD PRINTS BEARING EARLIER REVISION DATES

REVISION DATES	SHEET	OF
	1	11

Dist	COUNTY	ROUTE	POST MILES TOTAL PROJECT	SHEET No.	TOTAL SHEETS
5	SCR	1	8.1/10.7	853	931

REGISTERED CIVIL ENGINEER DATE

PLANS APPROVAL DATE

REGISTERED PROFESSIONAL ENGINEER
MARSHALL EUGENE MOORE
No. S6557
Exp. 9-30-25
STRUCTURAL
STATE OF CALIFORNIA

THE STATE OF CALIFORNIA OR ITS OFFICERS OR AGENTS SHALL NOT BE RESPONSIBLE FOR THE ACCURACY OR COMPLETENESS OF SCANNED COPIES OF THIS PLAN SHEET.

SCCRTC
1523 PACIFIC AVE
SANTA CRUZ, CA 95060

MARK THOMAS
701 UNIVERSITY AVE, STE 200
SACRAMENTO, CA 95825

GENERAL NOTES
LOAD & RESISTANCE FACTOR DESIGN

DESIGN: AASHTO LRFD Bridge Design Specifications, 4th Edition with California Amendments.

Standard Plans and Specifications, 2023 edition with Revised Standard Plans, dated January 2024.

Structural Technical Policies as of February 2023.

LIVE LOAD: Surcharge = 90 lb/ft

SOIL PARAMETERS:
Internal design Φ = 34°, Unit Weight (y) = 120 lb/ft^3
External design Φ (Retained Backfill) = 34°, Unit Weight (y) = 125 lb/ft^3
Φ (Foundation) = 32°
K_h = 0.24

PRECAST CONCRETE PANELS:
f'c = 4,000 psi (Concrete Compressive strength at 28 days)
fy = 60,000 psi (Yield strength of reinforcement)

SOIL REINFORCEMENT:
Welded Wire Mats: fy = 65,000 psi (Yield strength)
Coupler: fy = 36,000 psi (Yield strength)
Corrosion rate = 1.1 mils/year

REINFORCED CONCRETE:
f'_c = 3,6000 psi, except as noted
(Concrete compressive strength at 28 days)
fy = 60,000 psi (Yield Stength of reinforcement)

MSE = Mechanically Stabilized Embankment

QUANTITIES

MECHANICALLY STABILIZED EMBANKMENT	1,412	SF
STRUCTURAL CONCRETE, RETAINING WALL	42	CY
BAR REINFORCING STEEL (RETAINING WALL)	3,780	LB
BAR REINFORCING STEEL (GALVANIZED)	778	LB
CABLE PEDESTRIAN RAILING (TYPE 1)	402	LF

TOP OF WALL ELEVATION TABLE

	WALL LOL STATION	TOP OF WALL Elev
BEGIN RW No. 102 →	9+31.63	133.74
	9+50.00	133.74
	9+75.00	133.74
	10+00.00	133.74
	10+25.00	133.57
	10+50.00	133.40
	10+75.00	133.22
	11+00.00	133.05
	11+25.00	132.87
	11+50.00	132.70
	11+75.00	132.52
	12+00.00	132.35
	12+25.00	132.18
	12+50.00	132.00
	12+75.00	131.78
	13+00.00	131.46
	13+25.00	131.04
	13+50.00	130.54
	13+75.00	130.00
	14+00.00	129.43
END RW No. 102 →	14+01.63	129.42

INDEX TO PLAN

SHEET No.	TITLE
1	GENERAL PLAN
2	GENERAL NOTES
3	MECHANICALLY STABILIZED EMBANKMENT DETAILS No. 1
4	MECHANICALLY STABILIZED EMBANKMENT DETAILS No. 2
5	MECHANICALLY STABILIZED EMBANKMENT DETAILS No. 3
6	MECHANICALLY STABILIZED EMBANKMENT DETAILS No. 4
7	MECHANICALLY STABILIZED EMBANKMENT DETAILS No. 5
8	CABLE PEDESTRIAN RAILING (TYPE 1) DETAILS No. 1
9	CABLE PEDESTRIAN RAILING (TYPE 1) DETAILS No. 2
10	LOG OF TEST BORING 1 OF 2
11	LOG OF TEST BORING 2 OF 2

DRAFT - NOT FOR CONSTRUCTION

DESIGN OVERSIGHT

SIGN OFF DATE

	BY	CHECKED
DESIGN	T. FAIR/M . MOORE	J. SAMPSON
DETAILS	J. VALENZUELA	M. MOORE
QUANTITIES	X	X

PREPARED FOR THE STATE OF CALIFORNIA DEPARTMENT OF TRANSPORTATION

M. MOORE
PROJECT ENGINEER

BRIDGE No. N/A
POST MILE N/A

RETAINING WALL No. 102
GENERAL NOTES

STRUCTURES DESIGN DETAIL SHEET (ENGLISH) (REVISION 8/16/2021)

DATE PLOTTED => 3/17/2025 TIME PLOTTED => 3:31 PM
FILE => RW102_02_GN.dwg USERNAME => ETANAKA

ORIGINAL SCALE IN INCHES FOR REDUCED PLANS 0 1 2 3

PROJECT NUMBER & PHASE: 05200000831
COUNTY/ROUTE: SCR/1
CONTRACT No.: 05-0C734

DISREGARD PRINTS BEARING EARLIER REVISION DATES →

REVISION DATES					SHEET	OF
					2	11

Dist	COUNTY	ROUTE	POST MILES TOTAL PROJECT	SHEET No.	TOTAL SHEETS
5	SCR	1	8.1/10.7	854	931

REGISTERED CIVIL ENGINEER _____ DATE _____

PLANS APPROVAL DATE _____

REGISTERED PROFESSIONAL ENGINEER — MARSHALL EUGENE MOORE — No. S6557 — Exp. 09-30-25 — STRUCTURAL — STATE OF CALIFORNIA

THE STATE OF CALIFORNIA OR ITS OFFICERS OR AGENTS SHALL NOT BE RESPONSIBLE FOR THE ACCURACY OR COMPLETENESS OF SCANNED COPIES OF THIS PLAN SHEET.

THE REGISTERED CIVIL ENGINEER FOR THE PROJECT IS RESPONSIBLE FOR THE SELECTION AND PROPER APPLICATION OF THE COMPONENT DESIGN AND ANY MODIFICATIONS SHOWN.

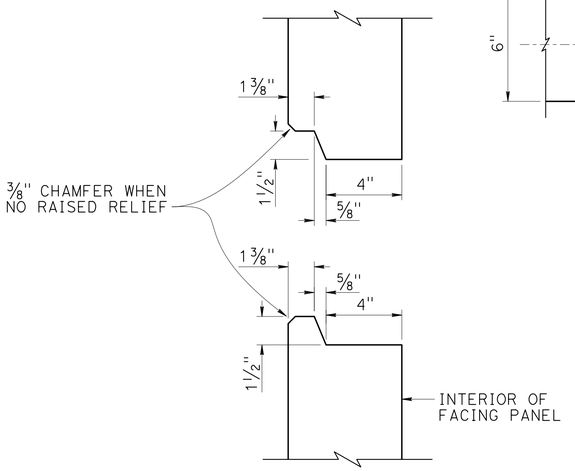

HORIZONTAL JOINT DETAIL
3" = 1'-0"

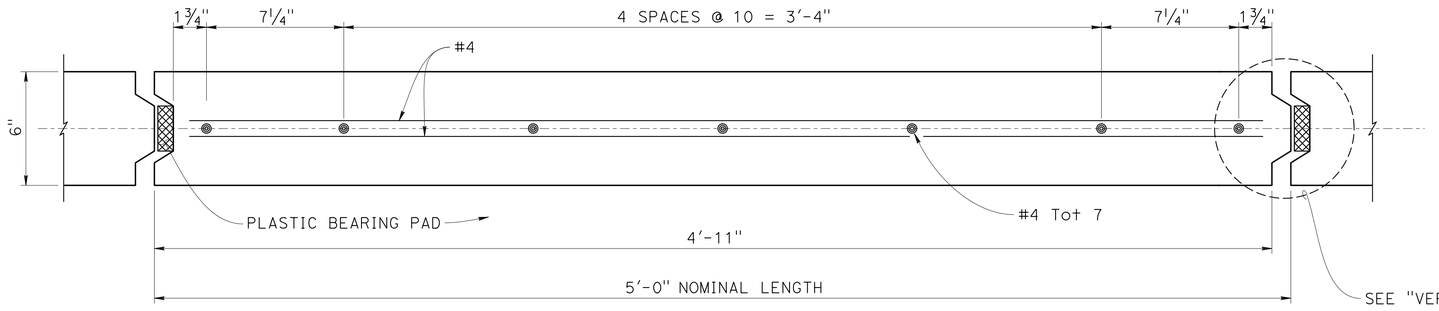

(1) NOTE: 5'-0" panel shown, shorter length similar.

PLAN - FACING PANEL
3" = 1'-0"

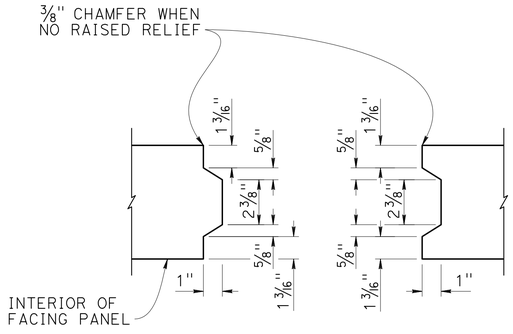

VERTICAL JOINT DETAIL
3" = 1'-0"

LEGEND:

Plain Plastic Bearing Pad

NOTES:

1. Concrete Surface Texture and treatment not shown.
2. Place Plain Plastic Bearing Pads in all of the panel joints between the panels. Place one in each vertical joint where the horizontal joints intersect. Place two per panel in each horizontal joint:

   3/4" x 2 3/8" x 6" for Vertical Joints
   3/4" x 4" x 6" for Horizontal Joints
3. Bond a strip of Filter Fabric Class A, 1'-0" wide, over the full length of all panel joints.
4. Top layer of welded wire mats attached parallel to top of panel when top of wall is angled or curved.
5. Eliminate mid-level mat when closer than 6" to top mat, continue variable dimensions between remaining mats.

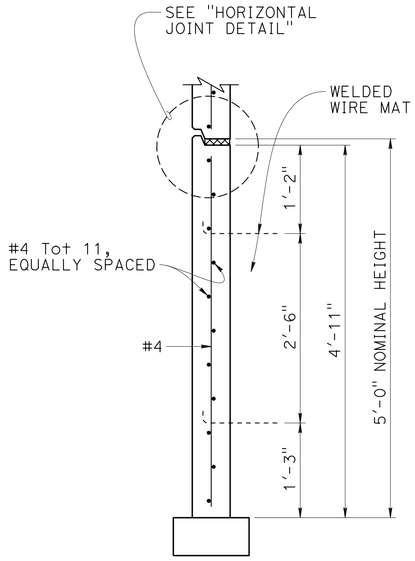

BOTTOM PANEL
1" = 1'-0"

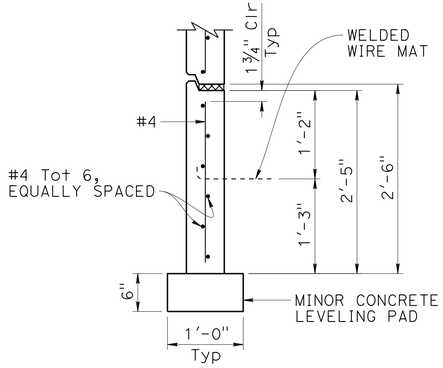

BOTTOM HALF PANEL
1" = 1'-0"

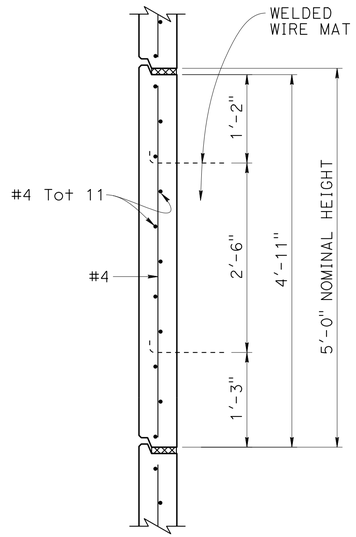

INTERMEDIATE PANEL
1" = 1'-0"

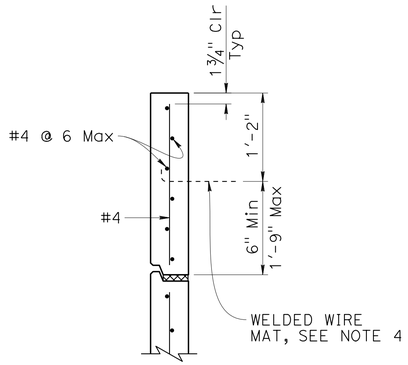

TOP HALF PANEL
1" = 1'-0"

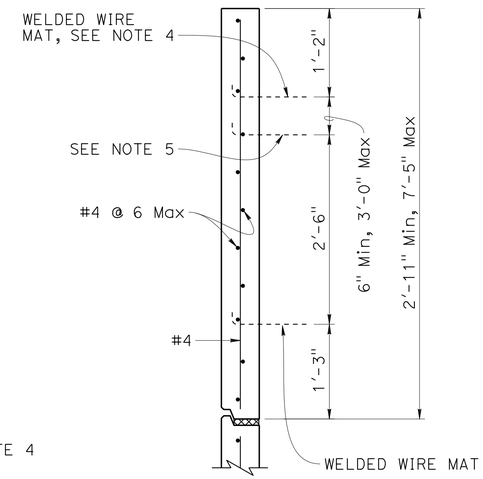

TOP PANEL WITH MULTIPLE MATS
1" = 1'-0"

DRAFT - NOT FOR CONSTRUCTION

REVISED BRIDGE STANDARD DETAILS		
xs13-020-1 (FILE No.)	April 2024 (APPROVAL DATE)	The components of the Bridge Standard Details have been prepared under the responsible charge of the Technical Owner, a registered civil engineer in the State of California

(1) Note added

STATE OF CALIFORNIA — DEPARTMENT OF TRANSPORTATION

DIVISION OF ENGINEERING SERVICES

BRIDGE No. 36-XXXX

POST MILE X.X

SPECIAL DETAILS

RETAINING WALL No. 102

MECHANICALLY STABILIZED EMBANKMENT DETAILS No. 1

Refer to: http://www.dot.ca.gov/hq/esc/techpubs/manual/bridgemanuals/bridge-standard-detail-sheets/index.html

DATE PLOTTED => 17-MAR-2025 TIME PLOTTED => 15:38
FILE => RW102_03_xs13-020-1.dgn USERNAME => etanaka

ORIGINAL SCALE IN INCHES FOR REDUCED PLANS 0 1 2 3

UNIT: XXXX COUNTY/ROUTE/ZONE: SCR/1
PROJECT NUMBER & PHASE: 05200000831 CONTRACT No.: 05-0C734

DISREGARD PRINTS BEARING EARLIER REVISION DATES →

REVISION DATES

SHEET 3 OF 11

Dist	COUNTY	ROUTE	POST MILES TOTAL PROJECT	SHEET No.	TOTAL SHEETS
5	SCR	1	8.1/10.7	855	931

REGISTERED CIVIL ENGINEER _____ DATE _____

PLANS APPROVAL DATE _____

REGISTERED PROFESSIONAL ENGINEER — MARSHALL EUGENE MOORE — No. S6557 — Exp. 09-30-25 — STRUCTURAL — STATE OF CALIFORNIA

THE STATE OF CALIFORNIA OR ITS OFFICERS OR AGENTS SHALL NOT BE RESPONSIBLE FOR THE ACCURACY OR COMPLETENESS OF SCANNED COPIES OF THIS PLAN SHEET.

THE REGISTERED CIVIL ENGINEER FOR THE PROJECT IS RESPONSIBLE FOR THE SELECTION AND PROPER APPLICATION OF THE COMPONENT DESIGN AND ANY MODIFICATIONS SHOWN.

② GENERAL NOTES
LOAD AND RESISTANCE FACTOR DESIGN

DESIGN:
AASHTO LRFD Bridge Design Specifications, 2007 edition with California Amendments

LIVE LOADING:
2'-0" Live Load Surcharge

SEISMIC LOADING:
K_h = 0.2

REINFORCED CONCRETE:
f_y = 60 ksi
f'_c = 3.6 ksi

PRECAST CONCRETE PANELS:
f_y = 60 ksi
f'_c = 4.0 ksi

SOIL REINFORCEMENT:
Welded Wire Mats: F_y = 65 ksi
Coupler: F_y = 36 ksi
Corrosion rate = 1.1 mils/year

SOIL PARAMETERS:
Internal Design Φ = 34°, γ = 0.120 kip/ft
External Design Φ (Retained Backfill) = 30°, γ = 0.120 kip/ft
Φ (Foundation) = 30°

NOTES:

1. Distance as required to permit Coupler to be swaged.
2. Place #4 x 3'-2", centered on Connector Mat, but not welded to it.
3. All Transverse Wires size W15 at various spacing as shown elsewhere.
4. Size of Longitudinal Wires shown elsewhere.

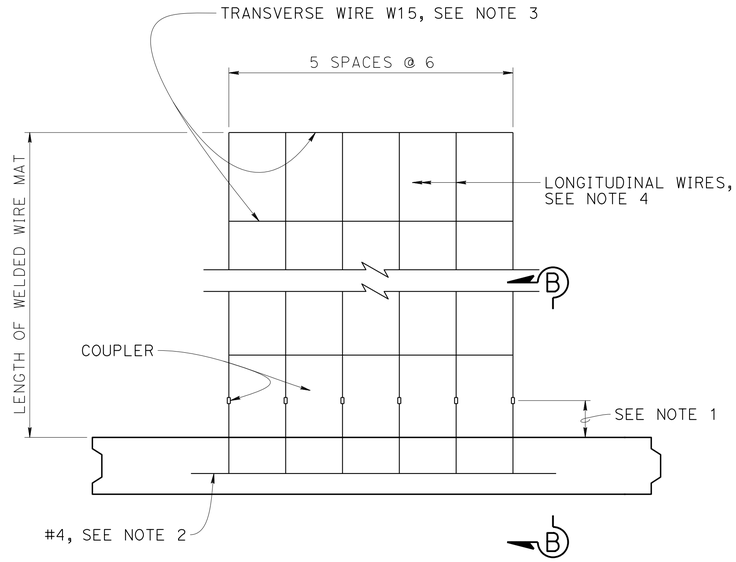

① NOTE: 5'-0" panel shown, shorter length similar.

PLAN (SIX WELDED WIRE MAT)
NO SCALE

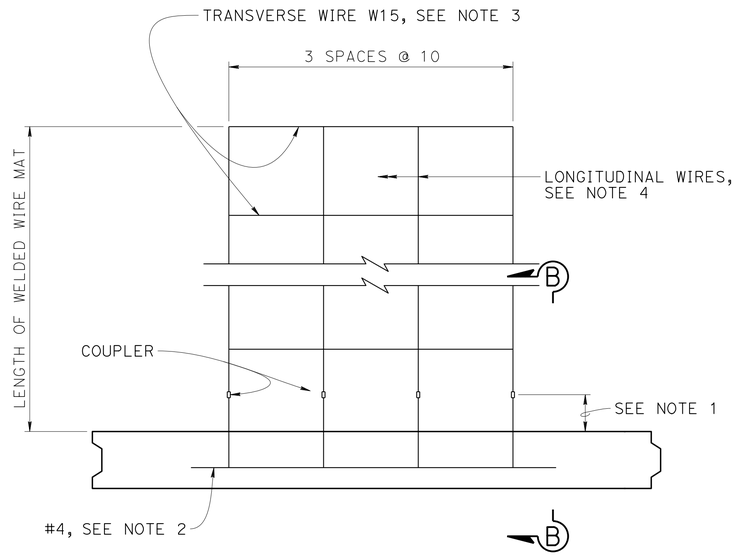

NOTE: 5'-0" panel shown, shorter length similar.

① PLAN (FOUR WELDED WIRE MAT)
NO SCALE

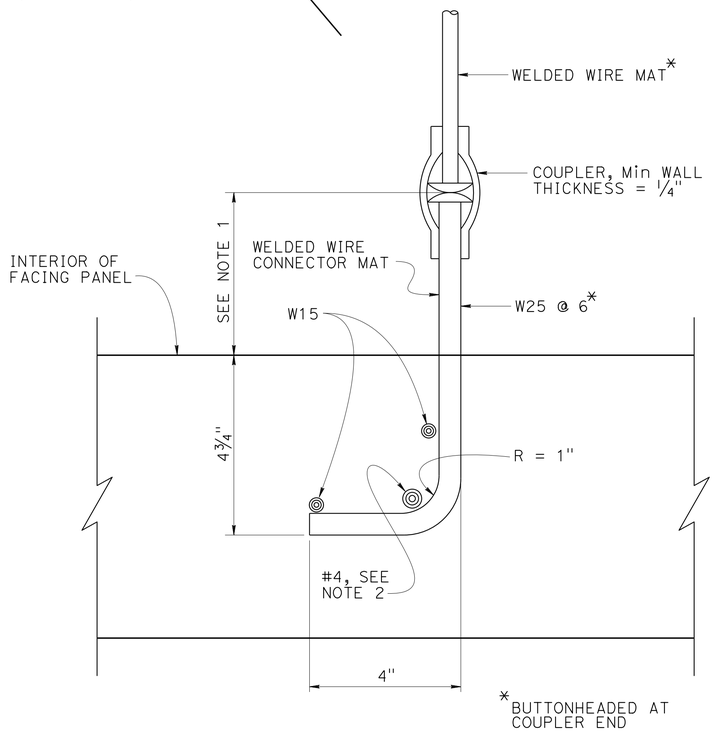

SECTION B-B
6" = 1'-0"

NOTE: Panel reinforcement not shown.

DRAFT - NOT FOR CONSTRUCTION

BRIDGE STANDARD DETAILS

xs13-020-2	April 2024	*The components of the Bridge Standard Details have been prepared under the responsible charge of the Technical Owner, a registered civil engineer in the State of California*
FILE No.	APPROVAL DATE	

① Note added
② Not used. See "GENERAL NOTES" sheet.

STATE OF CALIFORNIA
DEPARTMENT OF TRANSPORTATION

DIVISION OF ENGINEERING SERVICES

BRIDGE No. 36-XXXX
POST MILE X.X

SPECIAL DETAILS

RETAINING WALL No. 102

MECHANICALLY STABILIZED EMBANKMENT DETAILS No. 2

Refer to: http://www.dot.ca.gov/hq/esc/techpubs/manual/bridgemanuals/bridge-standard-detail-sheets/index.html

DATE PLOTTED => 17-MAR-2025 TIME PLOTTED => 15:39
FILE => RW102_04_xs13-020-2.dgn USERNAME => etanaka
ORIGINAL SCALE IN INCHES FOR REDUCED PLANS 0 1 2 3

UNIT: XXXX COUNTY/ROUTE/ZONE: SCR/1
PROJECT NUMBER & PHASE: 05200000831 CONTRACT No.: 05-0C734

DISREGARD PRINTS BEARING EARLIER REVISION DATES →

REVISION DATES | SHEET 4 | OF 11

Dist	COUNTY	ROUTE	POST MILES TOTAL PROJECT	SHEET No.	TOTAL SHEETS
5	SCR	1	8.1/10.7	856	931

REGISTERED CIVIL ENGINEER _____ DATE _____

PLANS APPROVAL DATE _____

REGISTERED PROFESSIONAL ENGINEER
MARSHALL EUGENE MOORE
No. S6557
Exp. 09-30-25
STRUCTURAL
STATE OF CALIFORNIA

THE STATE OF CALIFORNIA OR ITS OFFICERS OR AGENTS SHALL NOT BE RESPONSIBLE FOR THE ACCURACY OR COMPLETENESS OF SCANNED COPIES OF THIS PLAN SHEET.

THE REGISTERED CIVIL ENGINEER FOR THE PROJECT IS RESPONSIBLE FOR THE SELECTION AND PROPER APPLICATION OF THE COMPONENT DESIGN AND ANY MODIFICATIONS SHOWN.

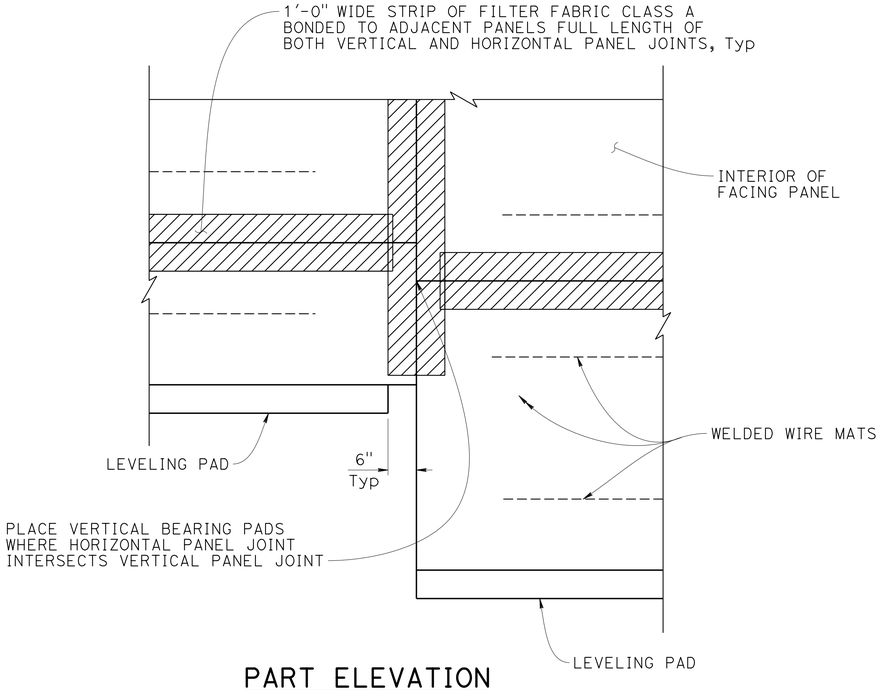

PART ELEVATION

3/4" = 1'-0"

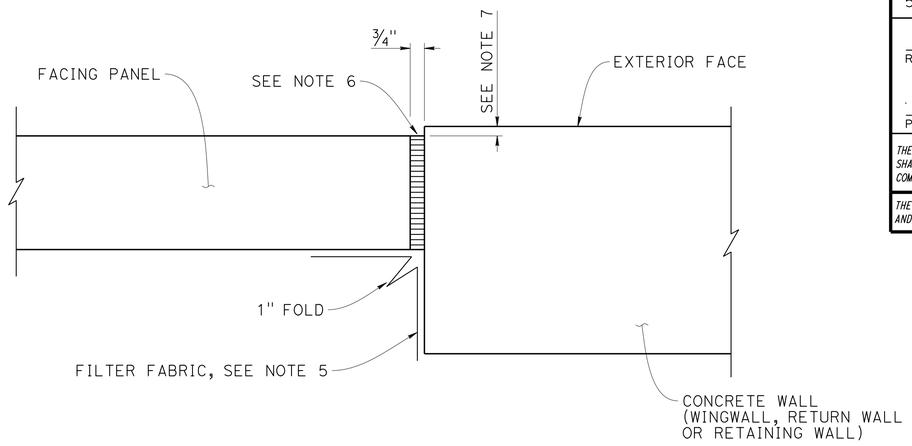

MSE FACING PANEL-TO-CONCRETE WALL JOINT DETAIL

3" = 1'-0"

NOTES:

1. Center inspection wire in Facing Panel.
2. Fabricate inspection wire from W11 wire representative of the welded wire mats, with 3/8"ø-16 UNC threads for at least 1 1/2" of one end.
3. Place inspection wire horizontal and perpendicular to the wall panel prior to backfilling.
4. Encapsulate threaded end with corrosion inhibiting mastic, vinyl covering, and secure with plastic tie.
5. Bond a strip of Filter Fabric Class A, 1'-6" wide, to back of MSE panels and the adjacent concrete wall for entire length of vertical joint.
6. Bond Expansion Joint Filler to the Concrete Wall.
7. Offset between face of MSE Facing Panel and face of the Concrete Wall as dictated by location of layout lines shown elsewhere.

LEGEND:

- Filter Fabric Class A
- Neoprene Plug
- Expansion Joint Filler
- UNC Unified Coarse Thread

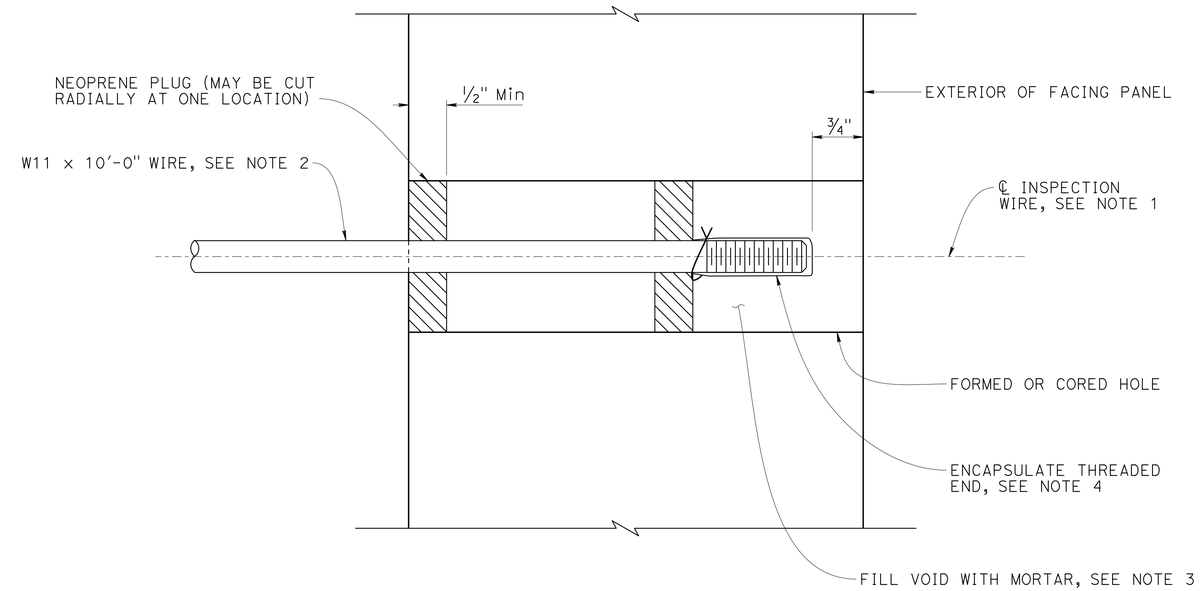

INSPECTION WIRE DETAIL

NO SCALE

DRAFT - NOT FOR CONSTRUCTION

BRIDGE STANDARD DETAILS

xs13-020-3 (FILE No.) | April 2024 (APPROVAL DATE)

The components of the Bridge Standard Details have been prepared under the responsible charge of the Technical Owner, a registered civil engineer in the State of California

STATE OF CALIFORNIA
DEPARTMENT OF TRANSPORTATION

DIVISION OF ENGINEERING SERVICES

BRIDGE No. 36-XXXX
POST MILE X.X

SPECIAL DETAILS

RETAINING WALL No. 102

MECHANICALLY STABILIZED EMBANKMENT DETAILS No. 3

Refer to: http://www.dot.ca.gov/hq/esc/techpubs/manual/bridgemanuals/bridge-standard-detail-sheets/index.html

DATE PLOTTED => 17-MAR-2025 TIME PLOTTED => 15:41
FILE => RW102_05_xs13-020-3.dgn USERNAME => etanaka

ORIGINAL SCALE IN INCHES FOR REDUCED PLANS 0 1 2 3

UNIT: XXXX COUNTY/ROUTE/ZONE: SCR/1
PROJECT NUMBER & PHASE: 05200000831 CONTRACT No.: 05-0C734

DISREGARD PRINTS BEARING EARLIER REVISION DATES →

REVISION DATES

SHEET 5 OF 11

Dist	COUNTY	ROUTE	POST MILES TOTAL PROJECT	SHEET No.	TOTAL SHEETS
5	SCR	1	8.1/10.7	857	931

REGISTERED CIVIL ENGINEER DATE

PLANS APPROVAL DATE

REGISTERED PROFESSIONAL ENGINEER
MARSHALL EUGENE MOORE
No. S6557
Exp. 9-30-25
STRUCTURAL
STATE OF CALIFORNIA

THE STATE OF CALIFORNIA OR ITS OFFICERS OR AGENTS SHALL NOT BE RESPONSIBLE FOR THE ACCURACY OR COMPLETENESS OF SCANNED COPIES OF THIS PLAN SHEET.

SCCRTC
1523 PACIFIC AVE
SANTA CRUZ, CA 95060

MARK THOMAS
701 UNIVERSITY AVE, STE 200
SACRAMENTO, CA 95825

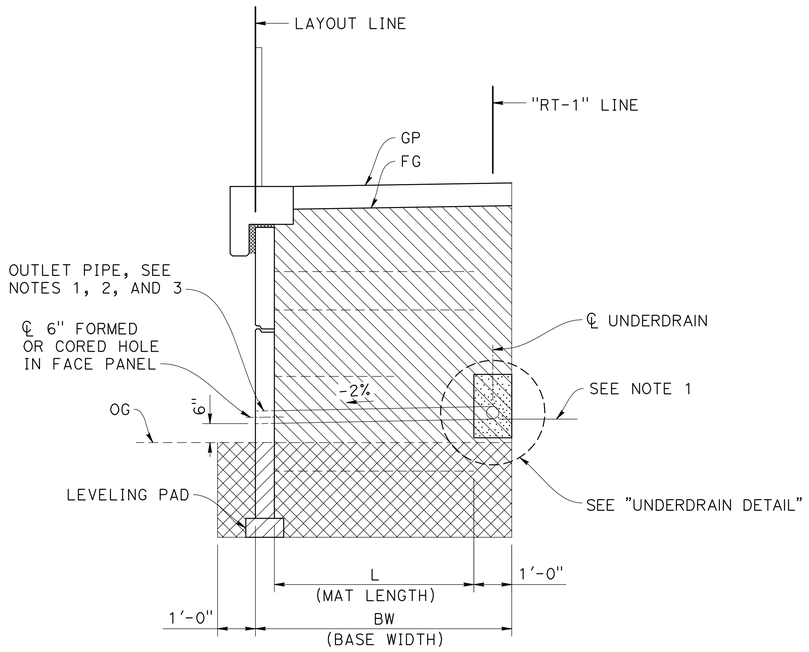

LIMITS OF EXCAVATION AND BACKFILL

NO SCALE

NOTES:

1. Locate underdrain behind bottom level of welded wire mats wherever possible, or at elevation needed to drain.
2. Place perforated pipe underdrain of diameter shown elsewhere on plans1 or minimum 4" ø smoothed wall PVC or minimum 8" ø corrugated HDPE.
3. Maximum spacing of Outlet Pipe and Cleanout Pipes is 200 feet.
4. At sags in profile of underdrain, install Outlet Pipe for each direction of flow.

LEGEND:

Structure Excavation

Structure Backfill

Permeable Material

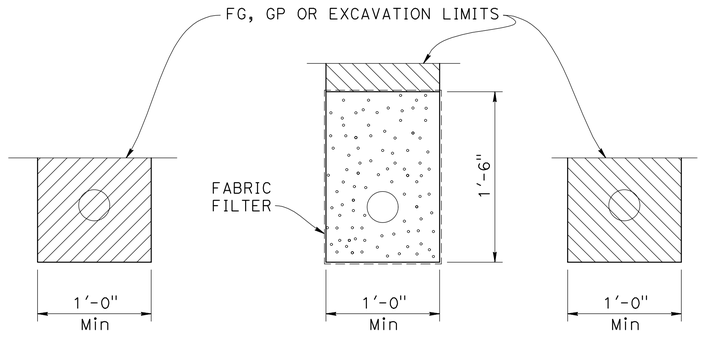

EXCAVATION **BACKFILL**

OUTLET PIPE **CLEANOUT PIPE**

UNPERFORATED OUTLET OR CLEAN OUT PIPE FOR UNDERDRAIN

NO SCALE

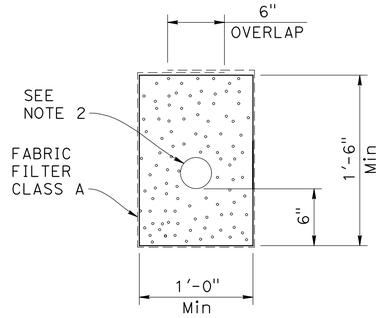

UNDERDRAIN DETAIL

NO SCALE

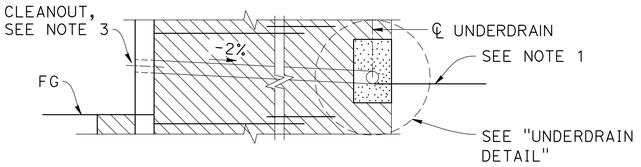

CLEANOUT DETAIL

NO SCALE

DRAFT - NOT FOR CONSTRUCTION

DESIGN OVERSIGHT	DESIGN	BY T. FAIR/M . MOORE	CHECKED J. SAMPSON	PREPARED FOR THE STATE OF CALIFORNIA DEPARTMENT OF TRANSPORTATION	M. MOORE PROJECT ENGINEER
SIGN OFF DATE	DETAILS	BY J. VALENZUELA	CHECKED M. MOORE		BRIDGE No. N/A
	QUANTITIES	BY X	CHECKED X		POST MILE N/A

RETAINING WALL No. 102

MECHANICALLY STABILIZED EMBANKMENT DETAILS No. 4

STRUCTURES DESIGN DETAIL SHEET (ENGLISH) (REVISION 8/16/2021)

DATE PLOTTED => 3/17/2025 TIME PLOTTED => 3:43 PM
FILE => RW102_06_DT4.dwg USERNAME => JVALENZUELA

ORIGINAL SCALE IN INCHES FOR REDUCED PLANS 0 1 2 3

PROJECT NUMBER & PHASE: 05200000831 COUNTY/ROUTE: SCR/1 CONTRACT No.: 05-0C734

DISREGARD PRINTS BEARING EARLIER REVISION DATES

REVISION DATES				SHEET	OF
				6	11

Dist	COUNTY	ROUTE	POST MILES TOTAL PROJECT	SHEET No.	TOTAL SHEETS
5	SCR	1	8.1/10.7	858	931

REGISTERED CIVIL ENGINEER DATE

PLANS APPROVAL DATE

REGISTERED PROFESSIONAL ENGINEER
MARSHALL EUGENE MOORE
No. S6557
Exp. 9-30-25
STRUCTURAL
STATE OF CALIFORNIA

THE STATE OF CALIFORNIA OR ITS OFFICERS OR AGENTS SHALL NOT BE RESPONSIBLE FOR THE ACCURACY OR COMPLETENESS OF SCANNED COPIES OF THIS PLAN SHEET.

SCCRTC
1523 PACIFIC AVE
SANTA CRUZ, CA 95060

MARK THOMAS
701 UNIVERSITY AVE, STE 200
SACRAMENTO, CA 95825

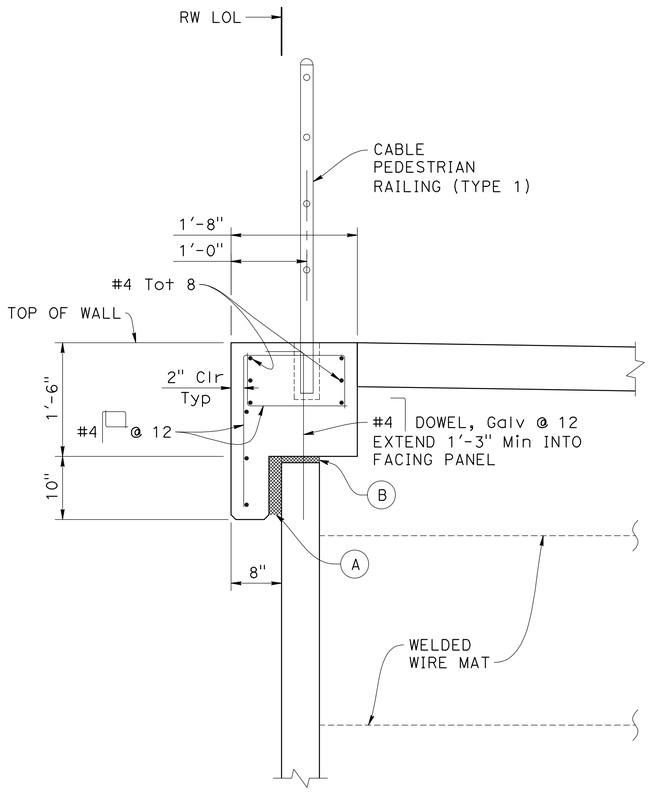

COPING AND PEDESTRIAN RAILING DETAIL

1" = 1'-0"

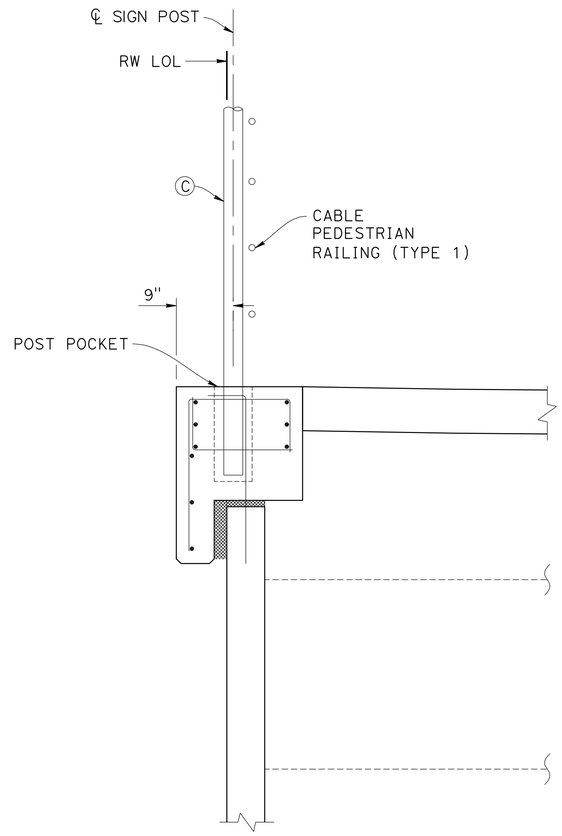

COPING AND SIGN POST DETAIL

1" = 1'-0"

NOTE: For details not shown, see "COPING AND RAILING DETAILS"

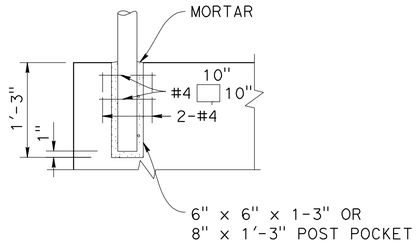

SIGN POST POCKET DETAIL

1" = 1'-0"

NOTES:

(A) 2" Expanded Polystyrene

(B) 1" Expanded Polystyrene

(C) See "SIGN PLANS" for sign post details and location.

DRAFT - NOT FOR CONSTRUCTION

DESIGN OVERSIGHT

SIGN OFF DATE

	BY	CHECKED
DESIGN	T. FAIR/M . MOORE	J. SAMPSON
DETAILS	J. VALENZUELA	M. MOORE
QUANTITIES	X	X

PREPARED FOR THE
STATE OF CALIFORNIA
DEPARTMENT OF TRANSPORTATION

M. MOORE
PROJECT ENGINEER

BRIDGE No. N/A
POST MILE N/A

RETAINING WALL No. 102

MECHANICALLY STABILIZED EMBANKMENT DETAILS No. 5

STRUCTURES DESIGN DETAIL SHEET
(ENGLISH) (REVISION 8/16/2021)

DATE PLOTTED => 3/18/2025
FILE => RW102_07_DT5.dwg

TIME PLOTTED => 6:23 AM
USERNAME => ETANAKA

ORIGINAL SCALE IN INCHES FOR REDUCED PLANS 0 1 2 3

PROJECT NUMBER & PHASE: 05200000831

COUNTY/ROUTE: SCR/1
CONTRACT No.: 05-0C734

DISREGARD PRINTS BEARING EARLIER REVISION DATES

REVISION DATES				SHEET	OF
				7	11

Dist	COUNTY	ROUTE	POST MILES TOTAL PROJECT	SHEET No.	TOTAL SHEETS
5	SCR	1	8.1/10.7	859	931

REGISTERED CIVIL ENGINEER DATE

PLANS APPROVAL DATE

REGISTERED PROFESSIONAL ENGINEER
MARSHALL EUGENE MOORE
No. S6557
Exp. 9-30-25
STRUCTURAL
STATE OF CALIFORNIA

THE STATE OF CALIFORNIA OR ITS OFFICERS OR AGENTS SHALL NOT BE RESPONSIBLE FOR THE ACCURACY OR COMPLETENESS OF SCANNED COPIES OF THIS PLAN SHEET.

SCCRTC
1523 PACIFIC AVE
SANTA CRUZ, CA 95060

MARK THOMAS
701 UNIVERSITY AVE, STE 200
SACRAMENTO, CA 95825

NOTES:

1. All components of the cable pedestrian railings must be hot dipped galvanized and finished with Natina stain.
2. All HSS members to comply with ASTM A500/A500m, Grade B. All other steel to comply with ASTM A36/A36M.
3. Orient tube seams to be on outside face of railing (i.e. not facing trail).
4. For cable pedestrian railing details and turnbuckle details, see "CABLE PEDESTRIAN RAILING (TYPE 1) DETAILS No. 2" sheet.

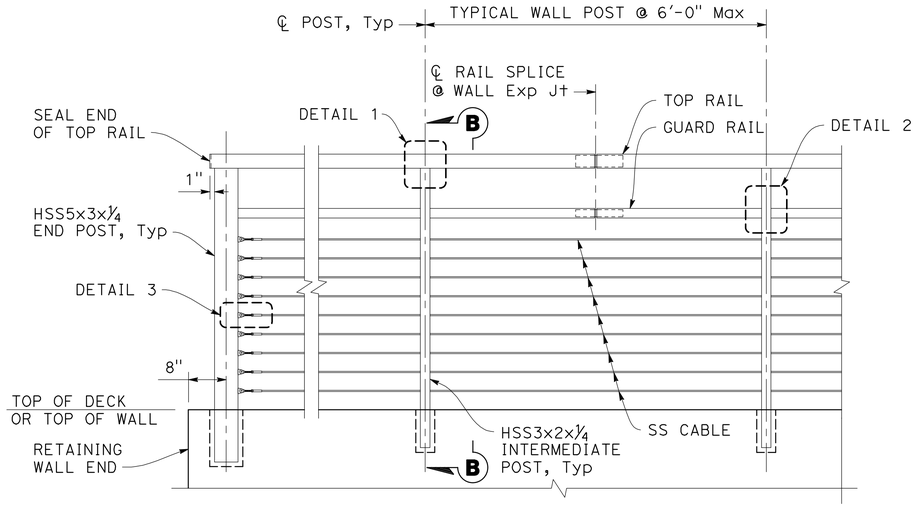

TYPICAL ELEVATION
3/4" = 1'-0"

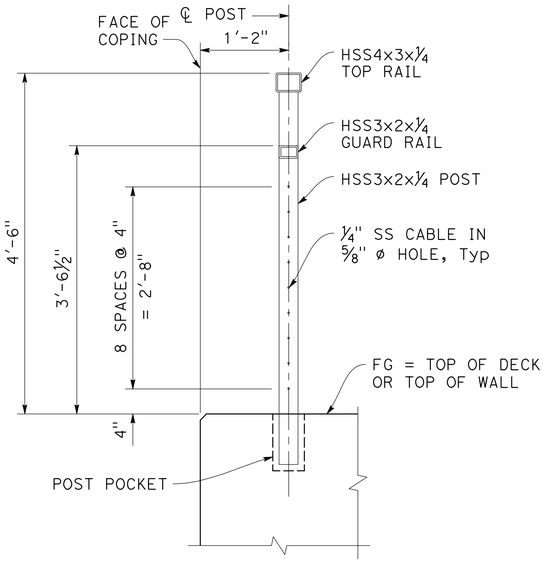

SECTION B-B
1" = 1'-0"

DRAFT - NOT FOR CONSTRUCTION

DESIGN OVERSIGHT

SIGN OFF DATE

	BY	CHECKED
DESIGN	T. FAIR/M . MOORE	J. SAMPSON
DETAILS	J. VALENZUELA	M. MOORE
QUANTITIES	X	X

PREPARED FOR THE STATE OF CALIFORNIA DEPARTMENT OF TRANSPORTATION

M. MOORE
PROJECT ENGINEER

BRIDGE No. N/A
POST MILE N/A

RETAINING WALL No. 102

CABLE PEDESTRIAN RAILING (TYPE 1) DETAILS No. 1

STRUCTURES DESIGN DETAIL SHEET (ENGLISH) (REVISION 8/16/2021)

DATE PLOTTED => 3/17/2025
FILE => RW102_08_CRDT1.dwg

TIME PLOTTED => 6:05 PM
USERNAME => JVALENZUELA

ORIGINAL SCALE IN INCHES FOR REDUCED PLANS 0 1 2 3

PROJECT NUMBER & PHASE: 05200000831

COUNTY/ROUTE: SCR/1
CONTRACT No.: 05-0C734

DISREGARD PRINTS BEARING EARLIER REVISION DATES

REVISION DATES				SHEET	OF
				8	11

Dist	COUNTY	ROUTE	POST MILES TOTAL PROJECT	SHEET No.	TOTAL SHEETS
5	SCR	1	8.1/10.7	860	931

REGISTERED CIVIL ENGINEER DATE

PLANS APPROVAL DATE

REGISTERED PROFESSIONAL ENGINEER — MARSHALL EUGENE MOORE — No. S6557 — Exp. 9-30-25 STRUCTURAL — STATE OF CALIFORNIA

THE STATE OF CALIFORNIA OR ITS OFFICERS OR AGENTS SHALL NOT BE RESPONSIBLE FOR THE ACCURACY OR COMPLETENESS OF SCANNED COPIES OF THIS PLAN SHEET.

SCCRTC
1523 PACIFIC AVE
SANTA CRUZ, CA 95060

MARK THOMAS
701 UNIVERSITY AVE, STE 200
SACRAMENTO, CA 95825

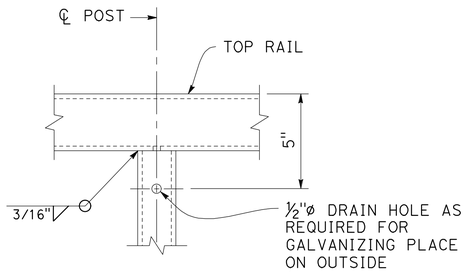

DETAIL 1
3" = 1'-0"

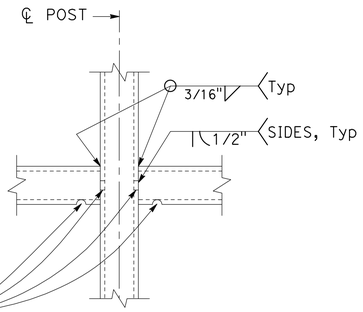

DETAIL 2
3" = 1'-0"

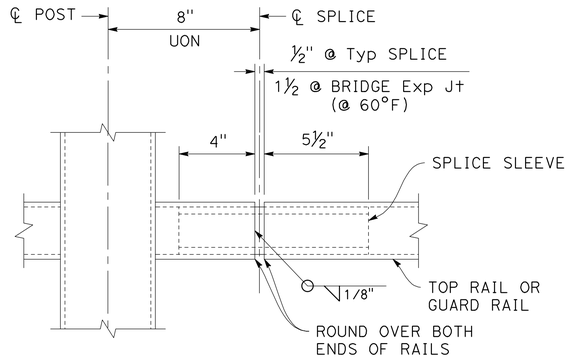

TYPICAL RAIL SPLICE DETAIL
3" = 1'-0"

NOTES:

1. For typical pedestrian bridge railing notes and for location of details, see "CABLE PEDESTRIAN RAILING (TYPE 1) DETAILS No. 1" sheet.
2. Cables must be spliced with turnbuckles spaced no more than 200 ft and not less than 50ft. turnbuckle must have minimum 1½" of adjustment and a minimum breaking load of 3500 lbs.
3. Submit cable product and fittings to engineer for review and approval. End fork connection plate dimensions to be adjusted to suit selected end fork product. Provide final dimensions when submitting fitting details.

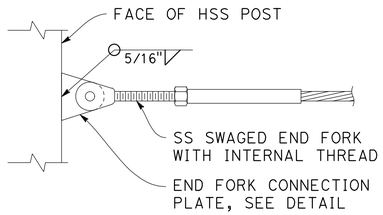

DETAIL 3
NO SCALE

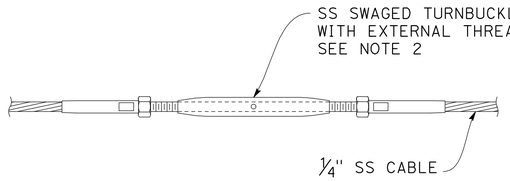

TYPICAL TURNBUCKLE DETAIL
NO SCALE

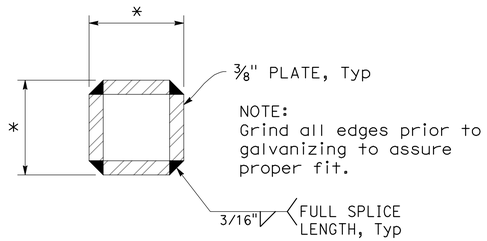

* The difference between the out-to-out rail splice sleeve dimensions and the clear inside dimensions of the tubular steel rail elements must not exceed 3/16" after galvanizing

SPLICE SLEEVE
NO SCALE

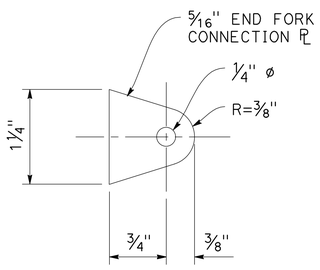

END FORK CONNECTION PLATE DETAIL
NO SCALE

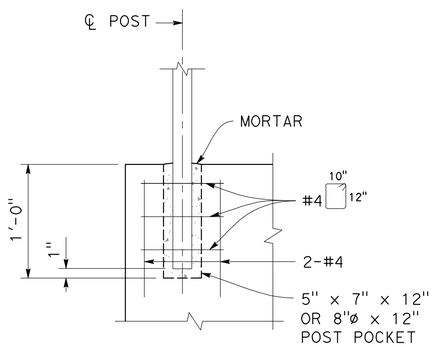

END POST POCKET DETAIL
NO SCALE

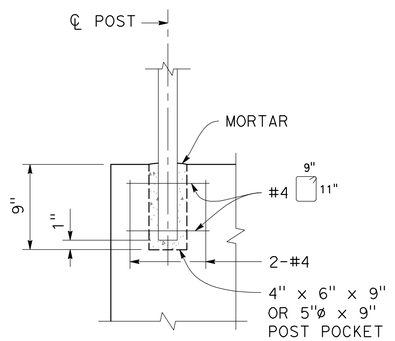

INTERMEDIATE POST POCKET DETAIL
NO SCALE

DRAFT - NOT FOR CONSTRUCTION

DESIGN OVERSIGHT		DESIGN	BY T. FAIR/M . MOORE	CHECKED J. SAMPSON	PREPARED FOR THE STATE OF CALIFORNIA DEPARTMENT OF TRANSPORTATION
SIGN OFF DATE		DETAILS	BY J. VALENZUELA	CHECKED M. MOORE	
		QUANTITIES	BY X	CHECKED X	

M. MOORE
PROJECT ENGINEER

BRIDGE No. N/A
POST MILE N/A

RETAINING WALL No. 102

CABLE PEDESTRIAN RAILING (TYPE 1) DETAILS No. 2

STRUCTURES DESIGN DETAIL SHEET (ENGLISH) (REVISION 8/16/2021)

DATE PLOTTED => 3/17/2025
FILE => RW102_09_CRDT2.dwg

TIME PLOTTED => 6:05 PM
USERNAME => JVALENZUELA

ORIGINAL SCALE IN INCHES FOR REDUCED PLANS 0 1 2 3

PROJECT NUMBER & PHASE: 05200000831

COUNTY/ROUTE: SCR/1
CONTRACT No.: 05-0C734

DISREGARD PRINTS BEARING EARLIER REVISION DATES

REVISION DATES				SHEET	OF
				9	11

Dist	COUNTY	ROUTE	POST MILES TOTAL PROJECT	SHEET No.	TOTAL SHEETS
5	SCR	1	8.1/10.7	863	931

REGISTERED CIVIL ENGINEER — DATE

PLANS APPROVAL DATE

REGISTERED PROFESSIONAL ENGINEER — MARSHALL EUGENE MOORE — No. S6557 — Exp. 9-30-25 — STRUCTURAL — STATE OF CALIFORNIA

THE STATE OF CALIFORNIA OR ITS OFFICERS OR AGENTS SHALL NOT BE RESPONSIBLE FOR THE ACCURACY OR COMPLETENESS OF SCANNED COPIES OF THIS PLAN SHEET.

SCCRTC
1523 PACIFIC AVE
SANTA CRUZ, CA 95060

MARK THOMAS
701 UNIVERSITY AVE, STE 200
SACRAMENTO, CA 95825

NOTES:

1. For "TYPICAL SECTION", see "RETAINING WALL LAYOUT No. 1" sheet.
2. For "INDEX TO PLANS", "QUANTITIES", and "GENERAL NOTES", see "GENERAL NOTES" sheet.
3. Architectural Treatment not shown for clarity. For details, see "AESTHETIC DETAILS" sheet.

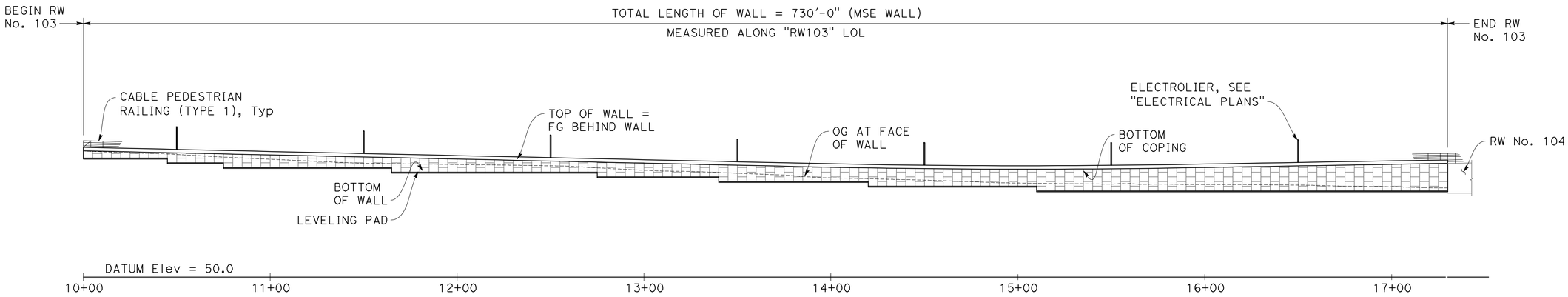

DEVELOPED ELEVATION

1' = 30'

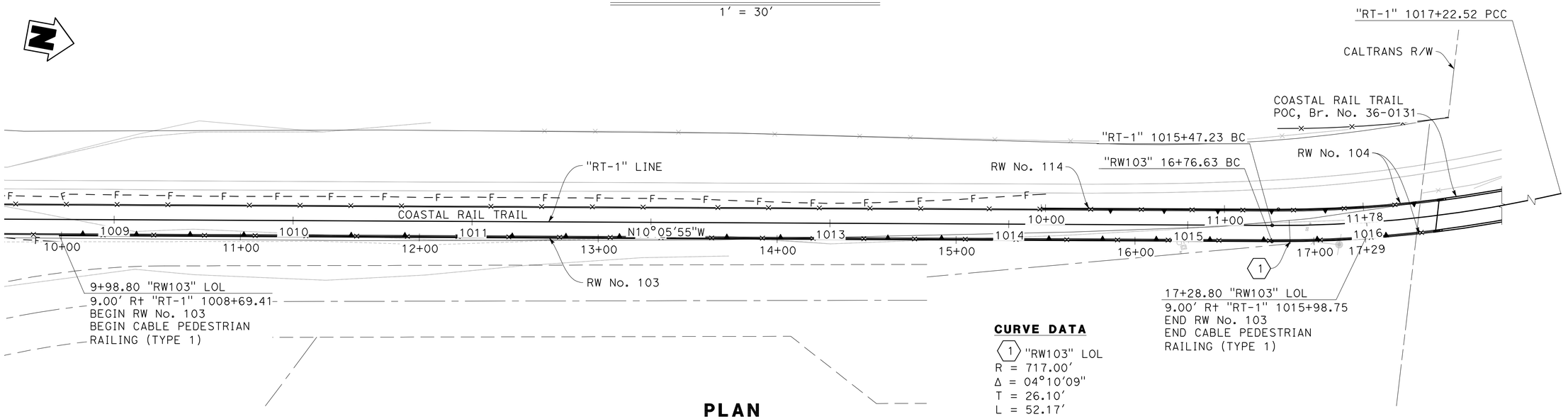

PLAN

1' = 30'

CURVE DATA

(1) "RW103" LOL
R = 717.00'
Δ = 04°10'09"
T = 26.10'
L = 52.17'

DRAFT - NOT FOR CONSTRUCTION

DESIGN OVERSIGHT	DESIGN	BY T. FAIR/M. MOORE	CHECKED J. SAMPSON	SEISMIC ANALYSIS	BY X	CHECKED X	PREPARED FOR THE STATE OF CALIFORNIA DEPARTMENT OF TRANSPORTATION
	DETAILS	BY J. VALENZUELA	CHECKED M. MOORE	LAYOUT	BY M. MOORE	CHECKED J. SAMPSON	
SIGN OFF DATE	QUANTITIES	BY X	CHECKED X	SPECIFICATIONS	BY M. MOORE	PLANS AND SPECS COMPARED J. HICKEY	

M. MOORE
PROJECT ENGINEER

BRIDGE No. N/A
POST MILE N/A

RETAINING WALL No. 103

GENERAL PLAN

STRUCTURES DESIGN GENERAL PLAN SHEET (ENGLISH) (REVISION 2/8/2022)

DATE PLOTTED => 4/3/2025
FILE => RW103_01_GP.dwg

TIME PLOTTED => 1:29 PM
USERNAME => ETANAKA

ORIGINAL SCALE IN INCHES FOR REDUCED PLANS 0 1 2 3

PROJECT NUMBER & PHASE: 05200000831

COUNTY/ROUTE: SCR/1
CONTRACT No.: 05-0C734

DISREGARD PRINTS BEARING EARLIER REVISION DATES

REVISION DATES				SHEET	OF
				1	17

GENERAL NOTES
LOAD & RESISTANCE FACTOR DESIGN

DESIGN: AASHTO LRFD Bridge Design Specifications, 4th edition with California Amendments.

Standard Plans and Specifications, 2023 edition with Revised Standard Plans, dated January 2024.

Structural Technical Policies as of February 2023.

LIVE LOAD: Surcharge = 90 lb/ft

SOIL PARAMETERS:
Internal design Φ = 34°, Unit Weight (y) = 120 lb/ft^3
External design Φ (Retained Backfill) = 34°, y = 125 lb/ft^3
Φ (Foundation) = 30°
K_h = 0.23

PRECAST CONCRETE PANELS:
f'c = 4,000 psi (Concrete Compressive strength at 28 days)
fy = 60,000 psi (Yield strength of reinforcement)

SOIL REINFORCEMENT:
Welded Wire Mats: fy = 65,000 psi (Yield strength)
Coupler: fy = 36,000 psi (Yield strength)
Corrosion rate = 1.1 mils/year

REINFORCED CONCRETE:
f'c = 3,6000 psi, except as noted
(Concrete compressive strength at 28 days)
fy = 60,000 psi (Yield Stength of reinforcement)

MSE = Mechanically Stabilized Embankment

INDEX TO PLAN

SHEET No.	TITLE
1	GENERAL PLAN
2	GENERAL NOTES
3	RETAINING WALL LAYOUT No. 1
4	RETAINING WALL LAYOUT No. 2
5	RETAINING WALL LAYOUT No. 3
6	ASTHETIC DETAILS No. 1
7	ASTHETIC DETAILS No. 2
8	MECHANICALLY STABILIZED EMBANKMENT DETAILS No. 1
9	MECHANICALLY STABILIZED EMBANKMENT DETAILS No. 2
10	MECHANICALLY STABILIZED EMBANKMENT DETAILS No. 3
11	MECHANICALLY STABILIZED EMBANKMENT DETAILS No. 4
12	MECHANICALLY STABILIZED EMBANKMENT DETAILS No. 5
13	CABLE PEDESTRIAN RAILING (TYPE 1) DETAILS No. 1
14	CABLE PEDESTRIAN RAILING (TYPE 1) DETAILS No. 2
15	LOG OF TEST BORING 1 OF 3
16	LOG OF TEST BORING 2 OF 3
17	LOG OF TEST BORING 3 OF 3

QUANTITIES

MECHANICALLY STABILIZED EMBANKMENT	6,631	SF
STRUCTURAL CONCRETE, RETAINING WALL	72	CY
BAR REINFORCING STEEL (RETAINING WALL)	5,789	LB
BAR REINFORCING STEEL (GALVANIZED)	1,138	LB
CABLE PEDESTRIAN RAILING (TYPE 1)	729	LF

TOP OF WALL ELEVATION TABLE

	WALL LOL STATION	TOP OF WALL Elev
BEGIN RW No. 103 →	9+98.80	119.29
	10+00.00	119.26
	10+25.00	118.71
	10+50.00	118.16
	10+75.00	117.61
	11+00.00	117.06
	11+25.00	116.51
	11+50.00	115.96
	11+75.00	115.41
	12+00.00	114.86
	12+25.00	114.31
	12+50.00	113.76
	12+75.00	113.21
	13+00.00	112.66
	13+25.00	112.11
	13+50.00	111.56
	13+75.00	111.01
	14+00.00	110.48
	14+25.00	110.04
	14+50.00	109.72
	14+75.00	106.53
	15+00.00	109.46
	15+25.00	109.51
	15+50.00	109.68
	15+75.00	109.97
	16+00.00	110.38
	16+25.00	110.80
	16+50.00	111.23
	16+75.00	111.65
	17+00.00	112.07
	17+25.00	112.49
END RW No. 103 →	17+28.80	112.56

DRAFT - NOT FOR CONSTRUCTION

Dist	COUNTY	ROUTE	POST MILES TOTAL PROJECT	SHEET No.	TOTAL SHEETS
5	SCR	1	8.1/10.7	864	931

REGISTERED CIVIL ENGINEER DATE

PLANS APPROVAL DATE

REGISTERED PROFESSIONAL ENGINEER — MARSHALL EUGENE MOORE — No. S6557 — Exp. 9-30-25 — STRUCTURAL — STATE OF CALIFORNIA

THE STATE OF CALIFORNIA OR ITS OFFICERS OR AGENTS SHALL NOT BE RESPONSIBLE FOR THE ACCURACY OR COMPLETENESS OF SCANNED COPIES OF THIS PLAN SHEET.

SCCRTC
1523 PACIFIC AVE
SANTA CRUZ, CA 95060

MARK THOMAS
701 UNIVERSITY AVE, STE 200
SACRAMENTO, CA 95825

DESIGN OVERSIGHT

SIGN OFF DATE

	BY	CHECKED
DESIGN	T. FAIR/M. MOORE	J. SAMPSON
DETAILS	J. VALENZUELA	M. MOORE
QUANTITIES	X	X

PREPARED FOR THE STATE OF CALIFORNIA DEPARTMENT OF TRANSPORTATION

M. MOORE
PROJECT ENGINEER

BRIDGE No. N/A
POST MILE N/A

RETAINING WALL No. 103
GENERAL NOTES

STRUCTURES DESIGN DETAIL SHEET (ENGLISH) (REVISION 8/16/2021)

DATE PLOTTED => 4/4/2025 TIME PLOTTED => 10:47 AM
FILE => RW103_02_GN.dwg USERNAME => ETANAKA

ORIGINAL SCALE IN INCHES FOR REDUCED PLANS 0 1 2 3

PROJECT NUMBER & PHASE: 05200000831
COUNTY/ROUTE: SCR/1
CONTRACT No.: 05-0C734

DISREGARD PRINTS BEARING EARLIER REVISION DATES →

REVISION DATES					SHEET	OF
					2	17

MSE WALL DESIGN DATA

H	5′-0"	7′-6"	10′-0"	12′-6"	15′-0"	17′-6"
BW (L)	9′-6" (8′-0")	9′-6" (8′-0")	9′-6" (8′-0")	11′-6" (10′-0")	13′-6" (12′-0")	15′-6" (14′-0")
STEEL SOIL REINFORCEMENT	TOP 4 - W15xW15 @ 6 Bot 4 - W15xW15 @ 6	TOP 4 - W15xW15 @ 6 1 of 4 - W15xW15 @ 6 Bot 4 - W15x1W5 @ 6	TOP 4 - W15xW15 @ 6 2 of 4 - W15xW15 @ 5 Bot 4 - W20xW15 @ 9	TOP 4 - W15xW15 @ 6 3 of 4 - W15xW15 @ 5 Bot 4 - W20xW15 @ 9	TOP 4 - W15xW15 @ 6 3 of 4 - W15xW15 @ 5 1 of 4 - W20xW15 @ 9 Bot 4 - W20xW15 @ 9	TOP 4 - W15xW15 @ 6 4 of 4 - W15xW15 @ 5 1 of 4 - W20xW15 @ 9 Bot 4 - W20xW15 @ 9

NOTES:

- (40) Inspection Wire Location
  Interval in years from the time of construction to the time of removal of inspection wire.

3 of 4 - W20 x W15 @ 24
3 of = 3 Levels of Reinforcement Mats with
4-W20 x = 4 Longitudinal Wires W20 sized by
W15 @ 6 = W15 sized Transverse Wires at 24-inch spacing

Dist	COUNTY	ROUTE	POST MILES TOTAL PROJECT	SHEET No.	TOTAL SHEETS
5	SCR	1	8.1/10.7	865	931

REGISTERED CIVIL ENGINEER DATE

PLANS APPROVAL DATE

REGISTERED PROFESSIONAL ENGINEER — MARSHALL EUGENE MOORE — No. S6557 — Exp. 9-30-25 STRUCTURAL — STATE OF CALIFORNIA

THE STATE OF CALIFORNIA OR ITS OFFICERS OR AGENTS SHALL NOT BE RESPONSIBLE FOR THE ACCURACY OR COMPLETENESS OF SCANNED COPIES OF THIS PLAN SHEET.

SCCRTC
1523 PACIFIC AVE
SANTA CRUZ, CA 95060

MARK THOMAS
701 UNIVERSITY AVE, STE 200
SACRAMENTO, CA 95825

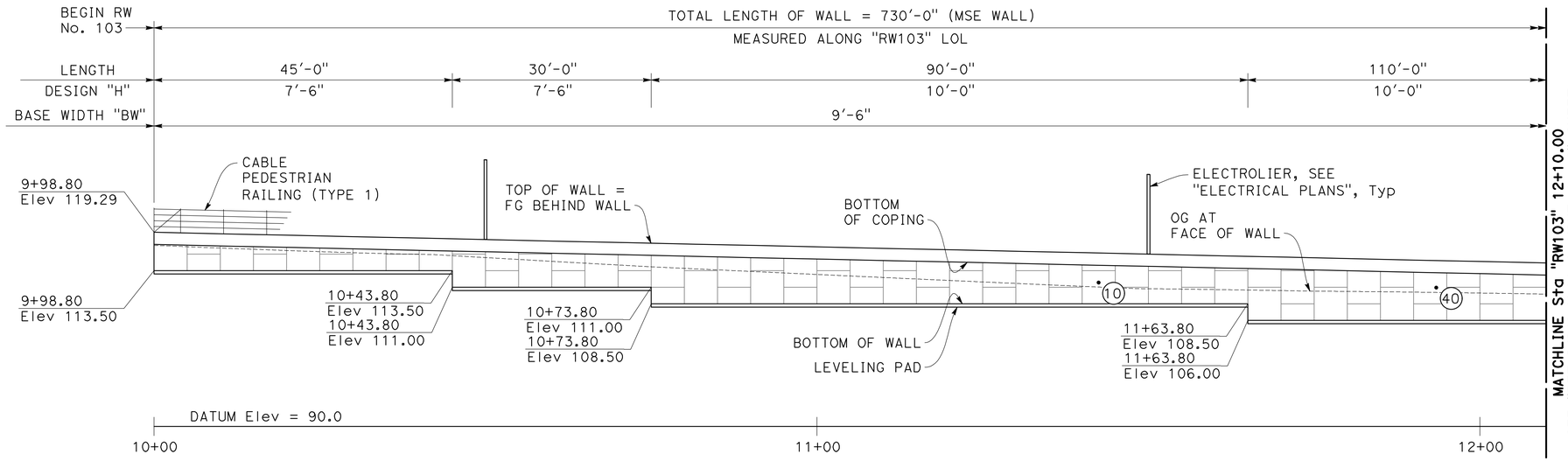

ELEVATION
1′ = 10′

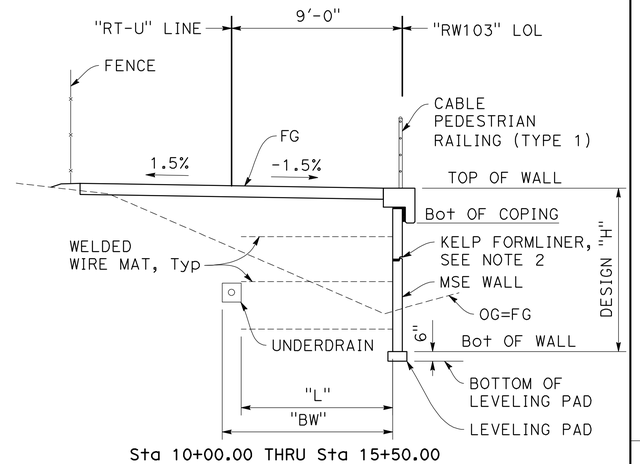

Sta 10+00.00 THRU Sta 15+50.00

TYPICAL SECTION A
1/4" = 1′-0"

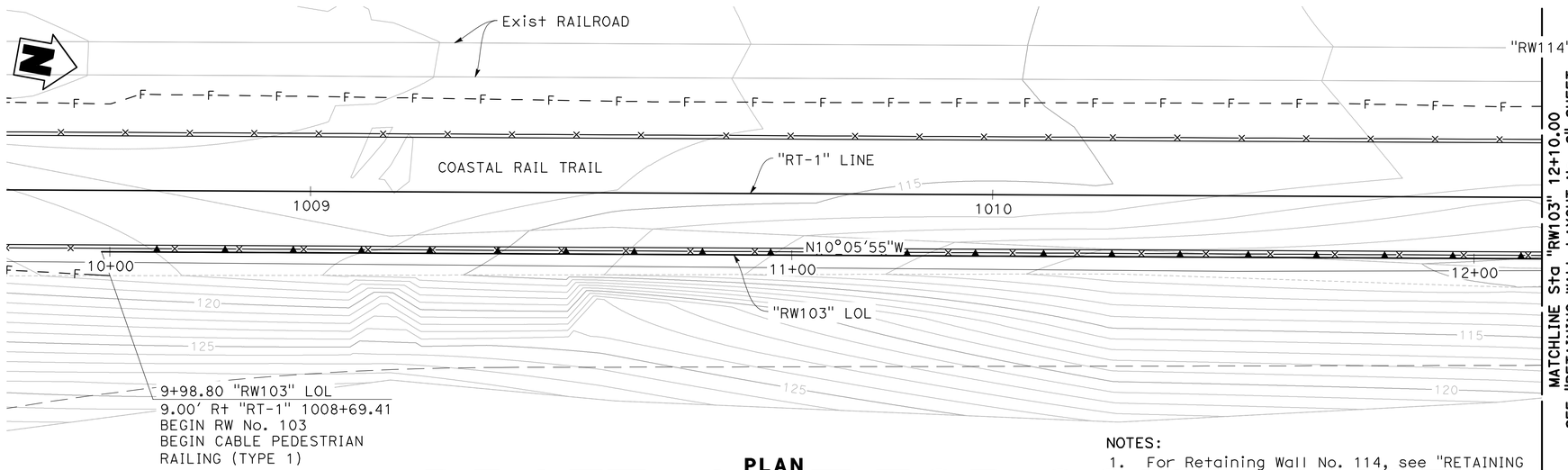

PLAN
1′ = 10′

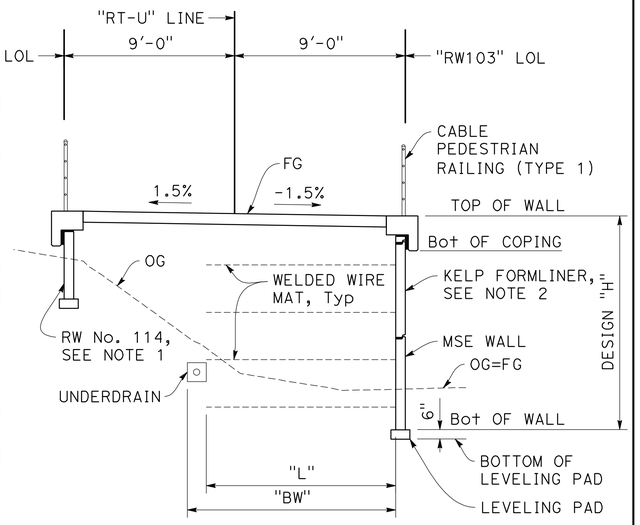

Sta 15+50.00 THRU Sta 17+55.91

TYPICAL SECTION B
1/4" = 1′-0"

NOTES:
1. For Retaining Wall No. 114, see "RETAINING WALL No. 114 PLANS"
1. "L" indicates Soil Reinforcement Length

DRAFT - NOT FOR CONSTRUCTION

DESIGN OVERSIGHT		DESIGN	BY T. FAIR/M. MOORE	CHECKED J. SAMPSON	PREPARED FOR THE STATE OF CALIFORNIA DEPARTMENT OF TRANSPORTATION	M. MOORE PROJECT ENGINEER	BRIDGE No. N/A
SIGN OFF DATE		DETAILS	BY J. VALENZUELA	CHECKED M. MOORE			POST MILE N/A
		QUANTITIES	BY X	CHECKED X			

RETAINING WALL No. 103

RETAINING WALL LAYOUT No. 1

STRUCTURES DESIGN DETAIL SHEET (ENGLISH) (REVISION 8/16/2021)

DATE PLOTTED => 4/3/2025 TIME PLOTTED => 1:37 PM
FILE => RW103_03_SP1.dwg USERNAME => ETANAKA

ORIGINAL SCALE IN INCHES FOR REDUCED PLANS 0 1 2 3

PROJECT NUMBER & PHASE: 05200000831 COUNTY/ROUTE: SCR/1 CONTRACT No.: 05-0C734

DISREGARD PRINTS BEARING EARLIER REVISION DATES →

REVISION DATES | SHEET 3 | OF 17

Dist	COUNTY	ROUTE	POST MILES TOTAL PROJECT	SHEET No.	TOTAL SHEETS
5	SCR	1	8.1/10.7	866	931

REGISTERED CIVIL ENGINEER — DATE

PLANS APPROVAL DATE

REGISTERED PROFESSIONAL ENGINEER — MARSHALL EUGENE MOORE — No. S6557 — Exp. 9-30-25 — STRUCTURAL — STATE OF CALIFORNIA

THE STATE OF CALIFORNIA OR ITS OFFICERS OR AGENTS SHALL NOT BE RESPONSIBLE FOR THE ACCURACY OR COMPLETENESS OF SCANNED COPIES OF THIS PLAN SHEET.

SCCRTC
1523 PACIFIC AVE
SANTA CRUZ, CA 95060

MARK THOMAS
701 UNIVERSITY AVE, STE 200
SACRAMENTO, CA 95825

NOTES:

(40) Inspection Wire Location

Interval in years from the time of construction to the time of removal of inspection wire.

3 of 4 - W20 x W15 @ 24
3 of = 3 Levels of Reinforcement Mats with
4-W20 x = 4 Longitudinal Wires W20 sized by
W15 @ 6 = W15 sized Transverse Wires at 24-inch spacing

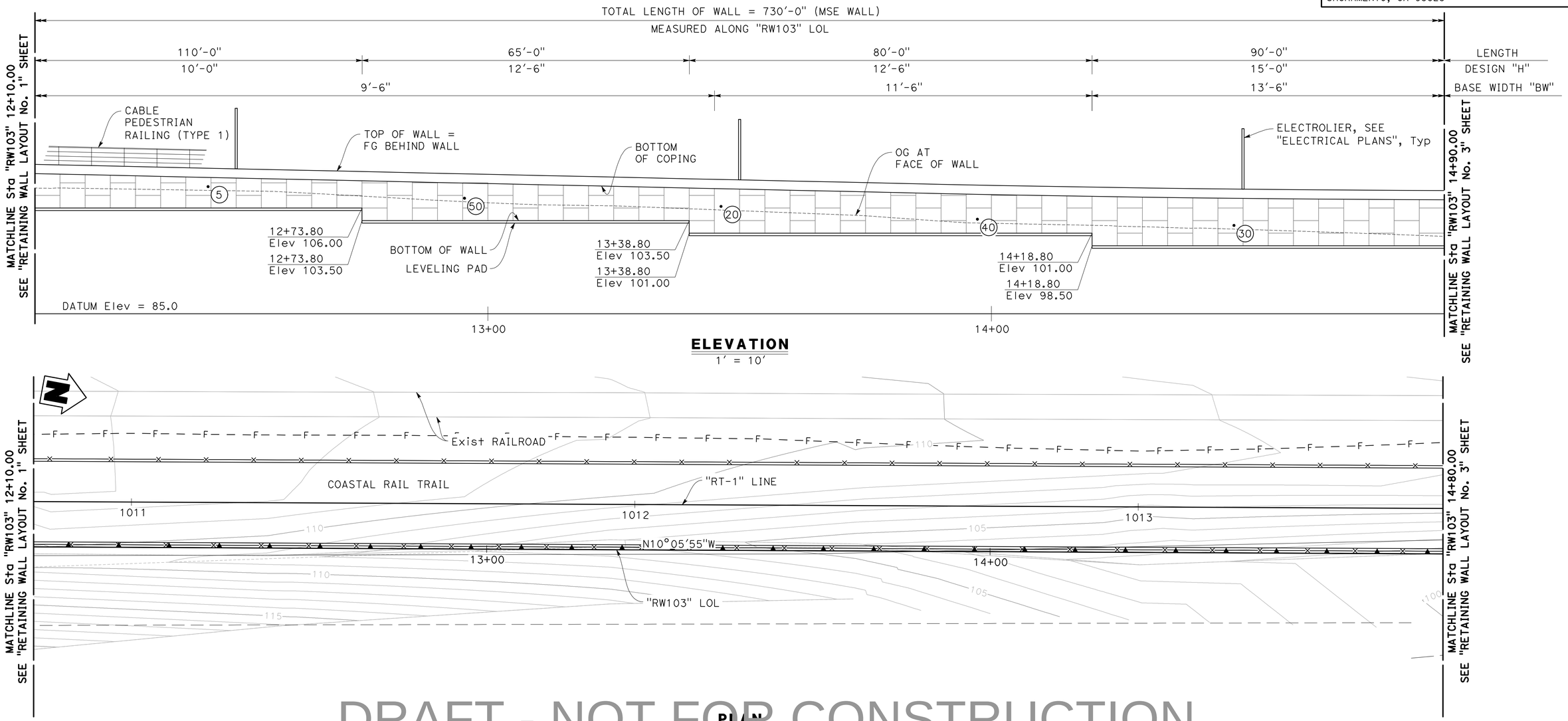

PLAN
1' = 10'

DRAFT - NOT FOR CONSTRUCTION

DESIGN OVERSIGHT				PREPARED FOR THE STATE OF CALIFORNIA DEPARTMENT OF TRANSPORTATION	M. MOORE, PROJECT ENGINEER
SIGN OFF DATE					
DESIGN	BY T. FAIR/M. MOORE	CHECKED J. SAMPSON			BRIDGE No. N/A
DETAILS	BY J. VALENZUELA	CHECKED M. MOORE			POST MILE N/A
QUANTITIES	BY X	CHECKED X			

RETAINING WALL No. 103

RETAINING WALL LAYOUT No. 2

STRUCTURES DESIGN DETAIL SHEET (ENGLISH) (REVISION 8/16/2021)

DATE PLOTTED => 4/3/2025 TIME PLOTTED => 1:38 PM
FILE => RW103_04_SP2.dwg USERNAME => ETANAKA

ORIGINAL SCALE IN INCHES FOR REDUCED PLANS 0 1 2 3

PROJECT NUMBER & PHASE: 05200000831 COUNTY/ROUTE: SCR/1 CONTRACT No.: 05-0C734

DISREGARD PRINTS BEARING EARLIER REVISION DATES →

REVISION DATES | SHEET 4 | OF 17

Dist	COUNTY	ROUTE	POST MILES TOTAL PROJECT	SHEET No.	TOTAL SHEETS
5	SCR	1	8.1/10.7	867	931

REGISTERED CIVIL ENGINEER — DATE

PLANS APPROVAL DATE

REGISTERED PROFESSIONAL ENGINEER — MARSHALL EUGENE MOORE — No. S6557 — Exp. 9-30-25 — STRUCTURAL — STATE OF CALIFORNIA

THE STATE OF CALIFORNIA OR ITS OFFICERS OR AGENTS SHALL NOT BE RESPONSIBLE FOR THE ACCURACY OR COMPLETENESS OF SCANNED COPIES OF THIS PLAN SHEET.

SCCRTC
1523 PACIFIC AVE
SANTA CRUZ, CA 95060

MARK THOMAS
701 UNIVERSITY AVE, STE 200
SACRAMENTO, CA 95825

NOTES:

(40) Inspection Wire Location
Interval in years from the time of construction to the time of removal of inspection wire.

3 of 4 - W20 x W15 @ 24
3 of = 3 Levels of Reinforcement Mats with
4-W20 x = 4 Longitudinal Wires W20 sized by
W15 @ 6 = W15 sized Transverse Wires at 24-inch spacing

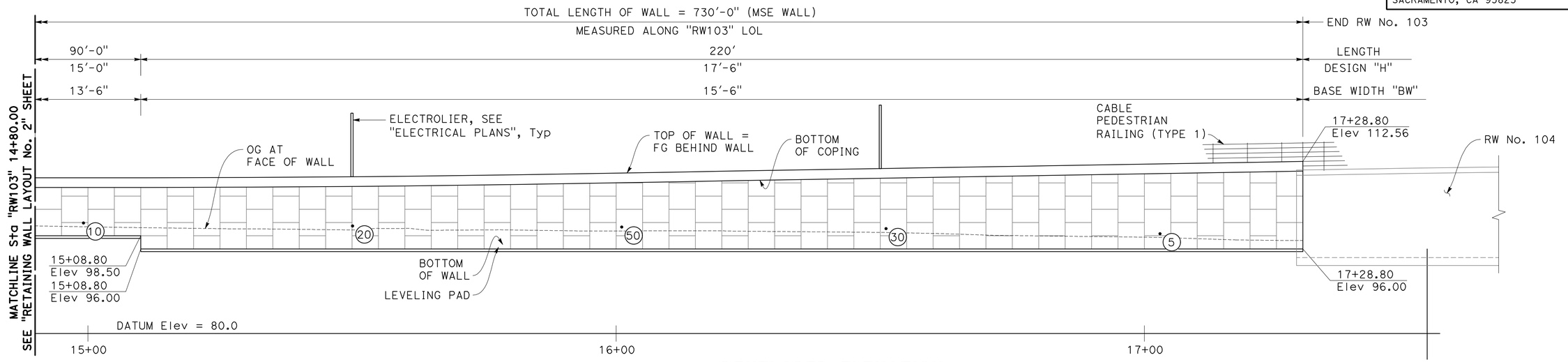

DEVELOPED ELEVATION

1" = 10'

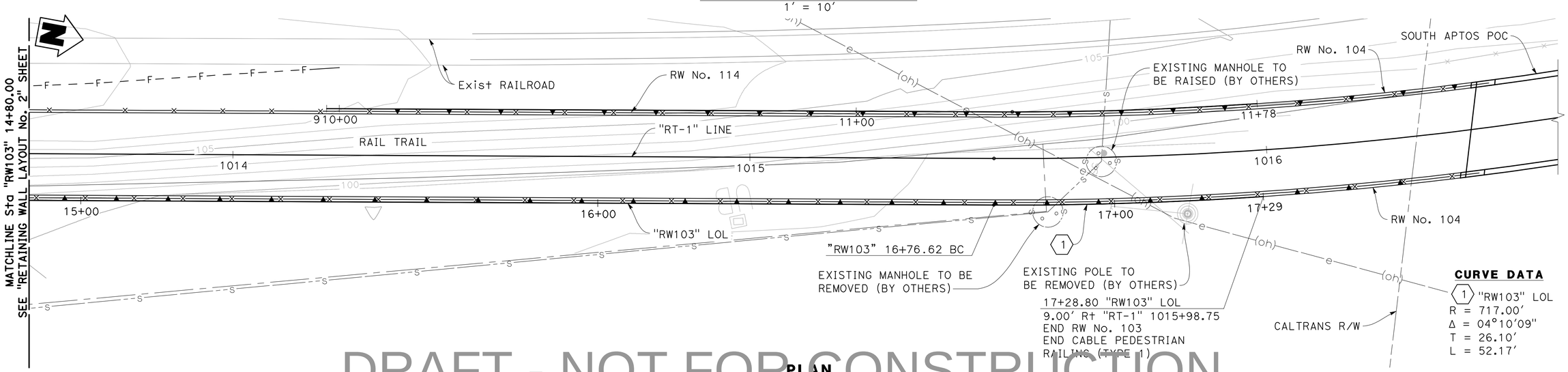

PLAN

1" = 10'

DRAFT - NOT FOR CONSTRUCTION

DESIGN OVERSIGHT		DESIGN	BY T. FAIR/M. MOORE	CHECKED J. SAMPSON	PREPARED FOR THE STATE OF CALIFORNIA DEPARTMENT OF TRANSPORTATION
SIGN OFF DATE		DETAILS	BY J. VALENZUELA	CHECKED M. MOORE	
		QUANTITIES	BY X	CHECKED X	

M. MOORE
PROJECT ENGINEER

BRIDGE No. N/A
POST MILE N/A

RETAINING WALL No. 103

RETAINING WALL LAYOUT No. 3

STRUCTURES DESIGN DETAIL SHEET (ENGLISH) (REVISION 8/16/2021)

DATE PLOTTED => 4/3/2025
FILE => RW103_05_SP3.dwg

TIME PLOTTED => 1:39 PM
USERNAME => ETANAKA

ORIGINAL SCALE IN INCHES FOR REDUCED PLANS 0 1 2 3

PROJECT NUMBER & PHASE: 05200000831

COUNTY/ROUTE: SCR/1
CONTRACT No.: 05-0C734

DISREGARD PRINTS BEARING EARLIER REVISION DATES

REVISION DATES				SHEET	OF
				5	17

NOTES:

1. Final structural depth of MSE Panel shall be determined by the MSE Supplier.
2. For Fractured Fin and Kelp Patterned MSE Panel details, see "AESTHETIC DETAILS No. 2" sheet.

Dist	COUNTY	ROUTE	POST MILES TOTAL PROJECT	SHEET No.	TOTAL SHEETS
5	SCR	1	8.1/10.7	691	931

REGISTERED CIVIL ENGINEER _____ DATE _____

PLANS APPROVAL DATE _____

REGISTERED PROFESSIONAL ENGINEER
JON ROBERT SAMPSON
No. 4344
Exp. 03-31-27
STRUCTURAL
STATE OF CALIFORNIA

THE STATE OF CALIFORNIA OR ITS OFFICERS OR AGENTS SHALL NOT BE RESPONSIBLE FOR THE ACCURACY OR COMPLETENESS OF SCANNED COPIES OF THIS PLAN SHEET.

SCCRTC
1101 PACIFIC AVE
SANTA CRUZ, CA 95060

MARK THOMAS
701 UNIVERSITY AVE, STE 200
SACRAMENTO, CA 95825

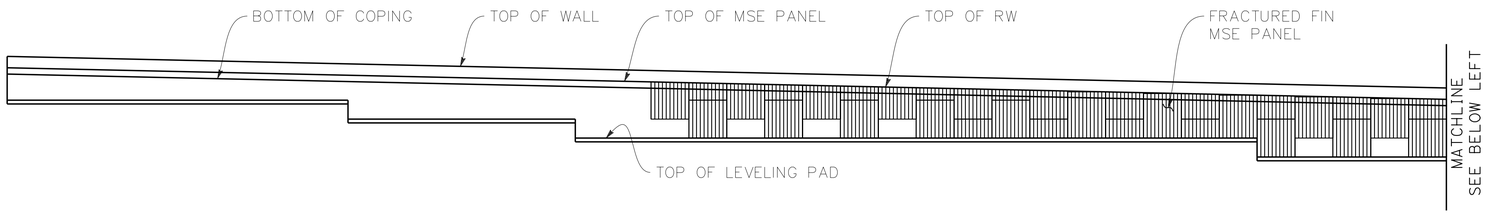

ARCHITECTURAL TREATMENT LAYOUT
1" = 10'

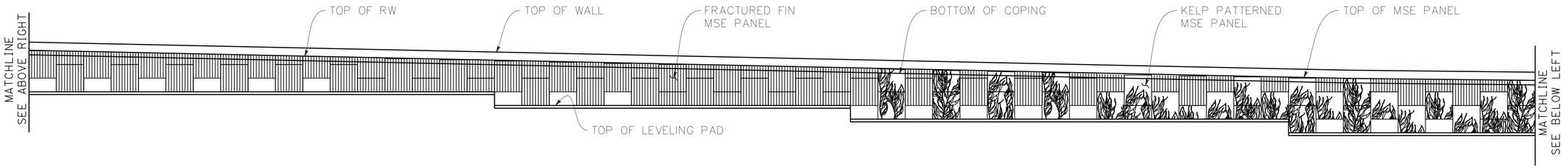

ARCHITECTURAL TREATMENT LAYOUT
1" = 10'

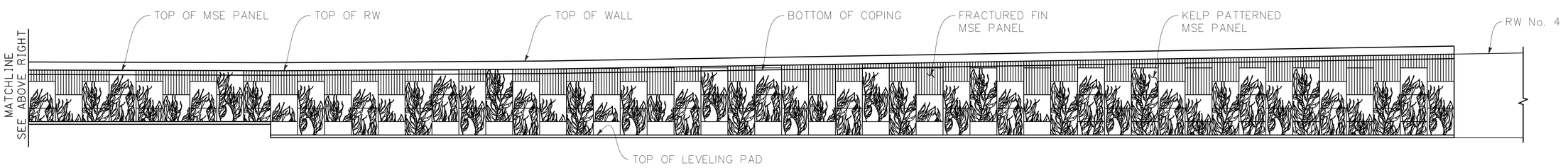

ARCHITECTURAL TREATMENT LAYOUT
1" = 10'

DRAFT - NOT FOR CONSTRUCTION

THE CONTRACTOR SHALL VERIFY ALL CONTROLLING FIELD DIMENSIONS BEFORE ORDERING OR FABRICATING ANY MATERIAL.

X
DESIGN OVERSIGHT

X
SIGN OFF DATE

	BY	CHECKED
DESIGN	T. FAIR/M. MOORE	J. SAMPSON
DETAILS	E. TANAKA	M. MOORE
QUANTITIES	X	X

PREPARED FOR THE STATE OF CALIFORNIA DEPARTMENT OF TRANSPORTATION

M. MOORE
PROJECT ENGINEER

BRIDGE No. 36E0067
POST MILE 10.0

RETAINING WALL No. 103
AESTHETIC DETAILS No. 1

STRUCTURES DESIGN DETAIL SHEET (ENGLISH) (REVISION 12/10/2024)

DATE PLOTTED => 4-APR-2025 TIME PLOTTED => 10:51
FILE => RW103_06_u-miscdt01.dgn USERNAME => etanaka

ORIGINAL SCALE IN INCHES FOR REDUCED PLANS 0 1 2 3

PROJECT NUMBER & PHASE: 05200000831 COUNTY/ROUTE/ZONE: SCR/1 CONTRACT No.: 05-0C734

DISREGARD PRINTS BEARING EARLIER REVISION DATES →

REVISION DATES				SHEET	OF
08/19/24				6	17

Dist	COUNTY	ROUTE	POST MILES TOTAL PROJECT	SHEET No.	TOTAL SHEETS
5	SCR	1	8.1/10.7	691	931

REGISTERED CIVIL ENGINEER _____ DATE _____

PLANS APPROVAL DATE _____

REGISTERED PROFESSIONAL ENGINEER
JON ROBERT SAMPSON
No. 4344
Exp. 03-31-27
STRUCTURAL
STATE OF CALIFORNIA

THE STATE OF CALIFORNIA OR ITS OFFICERS OR AGENTS SHALL NOT BE RESPONSIBLE FOR THE ACCURACY OR COMPLETENESS OF SCANNED COPIES OF THIS PLAN SHEET.

SCCRTC
1101 PACIFIC AVE
SANTA CRUZ, CA 95060

MARK THOMAS
701 UNIVERSITY AVE, STE 200
SACRAMENTO, CA 95825

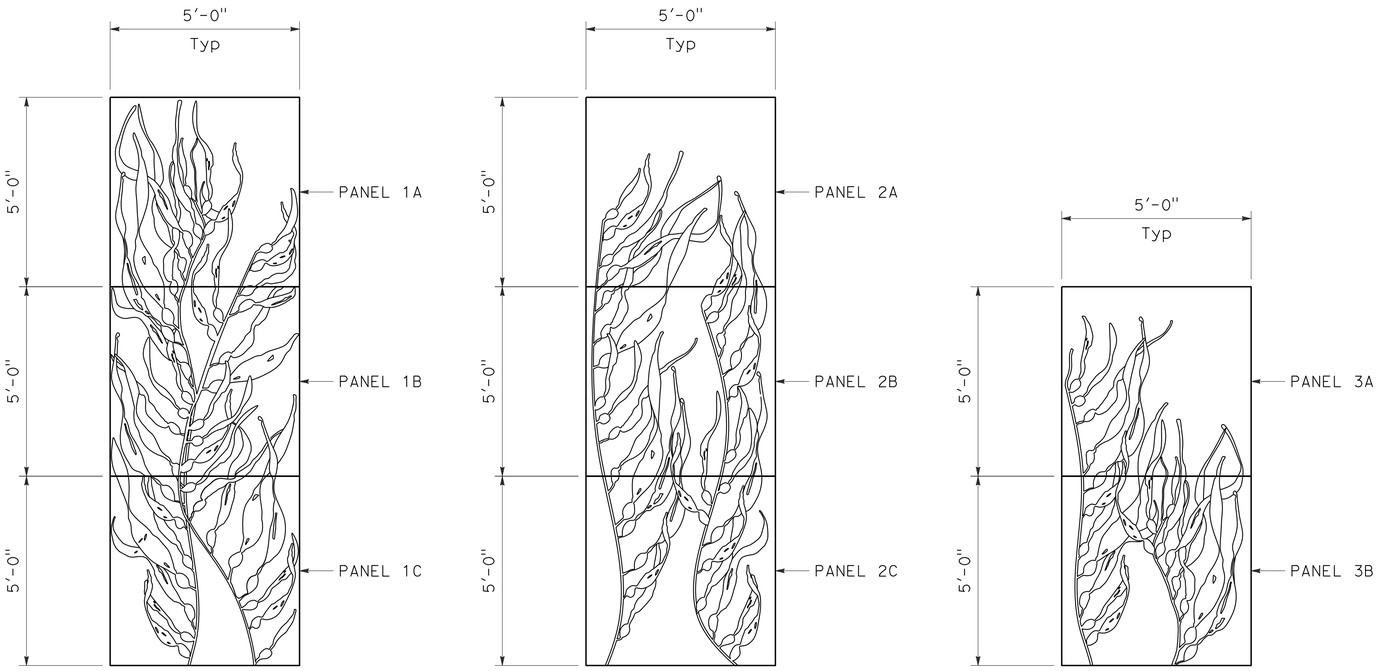

KELP PATTERN MSE PANELS
1/2" = 1'-0"

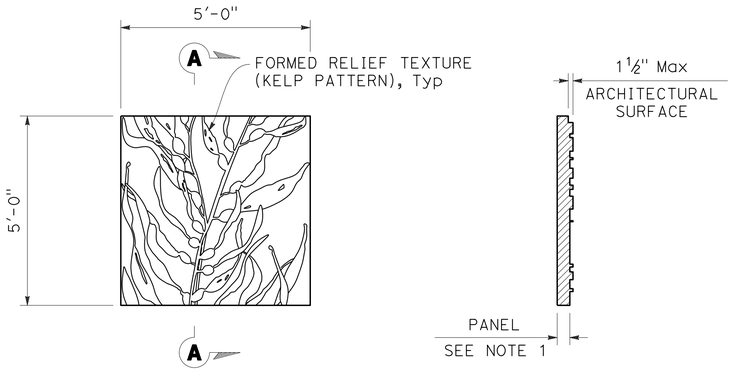

ELEVATION

SECTION A-A

MSE PANEL DETAIL
1/2" = 1'-0"

DRAFT - NOT FOR CONSTRUCTION

THE CONTRACTOR SHALL VERIFY ALL CONTROLLING FIELD DIMENSIONS BEFORE ORDERING OR FABRICATING ANY MATERIAL.

X
DESIGN OVERSIGHT

X
SIGN OFF DATE

	BY	CHECKED
DESIGN	T. FAIR/M. MOORE	J. SAMPSON
DETAILS	E. TANAKA	M. MOORE
QUANTITIES	X	X

PREPARED FOR THE STATE OF CALIFORNIA DEPARTMENT OF TRANSPORTATION

M. MOORE
PROJECT ENGINEER

BRIDGE No. 36E0067
POST MILE 10.0

RETAINING WALL No. 103
AESTHETIC DETAILS

STRUCTURES DESIGN DETAIL SHEET (ENGLISH) (REVISION 12/10/2024)

DATE PLOTTED => 3-APR-2025 TIME PLOTTED => 13:04
FILE => RW103_07_u-miscdt02.dgn USERNAME => etanaka

ORIGINAL SCALE IN INCHES FOR REDUCED PLANS 0 1 2 3

COUNTY/ROUTE/ZONE: SCR/1
PROJECT NUMBER & PHASE: 05200000831 CONTRACT No.: 05-0C734

DISREGARD PRINTS BEARING EARLIER REVISION DATES →

REVISION DATES					SHEET	OF
08/19/24					7	17

Dist	COUNTY	ROUTE	POST MILES TOTAL PROJECT	SHEET No.	TOTAL SHEETS

REGISTERED CIVIL ENGINEER DATE

PLANS APPROVAL DATE

REGISTERED PROFESSIONAL ENGINEER — MARSHALL EUGENE MOORE — No. S6557 — Exp. 09-30-25 — STRUCTURAL — STATE OF CALIFORNIA

THE STATE OF CALIFORNIA OR ITS OFFICERS OR AGENTS SHALL NOT BE RESPONSIBLE FOR THE ACCURACY OR COMPLETENESS OF SCANNED COPIES OF THIS PLAN SHEET.

THE REGISTERED CIVIL ENGINEER FOR THE PROJECT IS RESPONSIBLE FOR THE SELECTION AND PROPER APPLICATION OF THE COMPONENT DESIGN AND ANY MODIFICATIONS SHOWN.

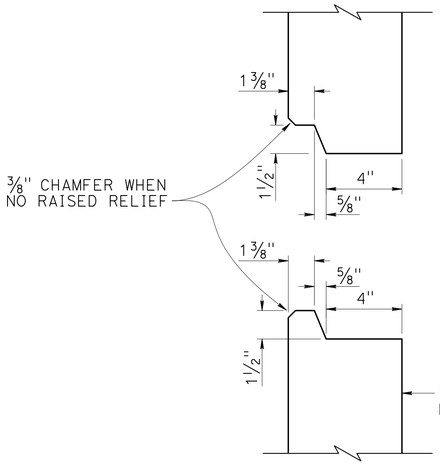

HORIZONTAL JOINT DETAIL
3" = 1'-0"

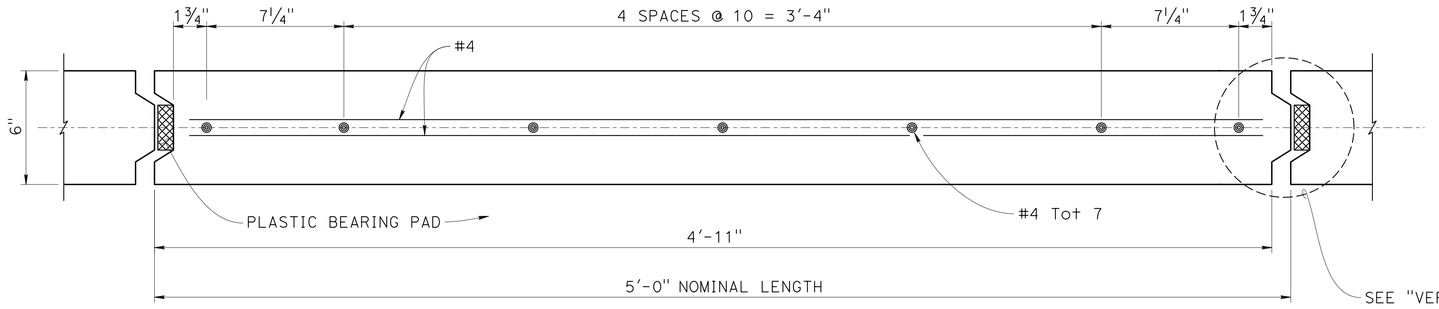

(1) NOTE: 5'-0" panel shown, shorter length similar.

PLAN - FACING PANEL
3" = 1'-0"

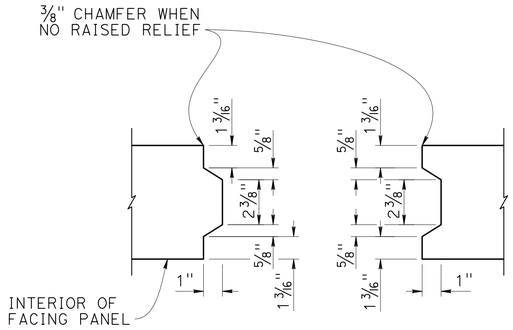

VERTICAL JOINT DETAIL
3" = 1'-0"

LEGEND:

Plain Plastic Bearing Pad

NOTES:

1. Concrete Surface Texture and treatment not shown.
2. Place Plain Plastic Bearing Pads in all of the panel joints between the panels. Place one in each vertical joint where the horizontal joints intersect. Place two per panel in each horizontal joint:

   3/4" x 2 3/8" x 6" for Vertical Joints
   3/4" x 4" x 6" for Horizontal Joints
3. Bond a strip of Filter Fabric Class A, 1'-0" wide, over the full length of all panel joints.
4. Top layer of welded wire mats attached parallel to top of panel when top of wall is angled or curved.
5. Eliminate mid-level mat when closer than 6" to top mat, continue variable dimensions between remaining mats.

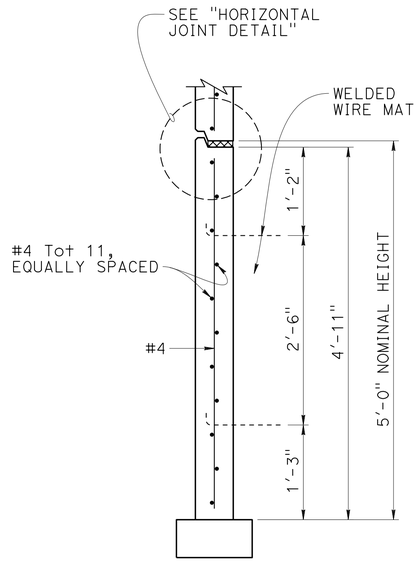

BOTTOM PANEL
1" = 1'-0"

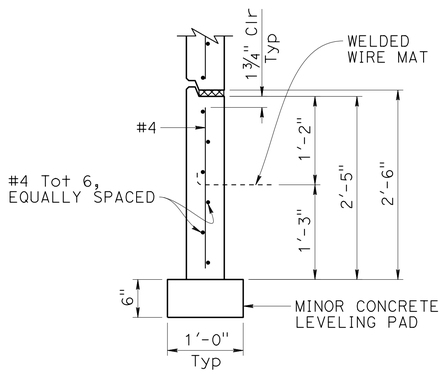

BOTTOM HALF PANEL
1" = 1'-0"

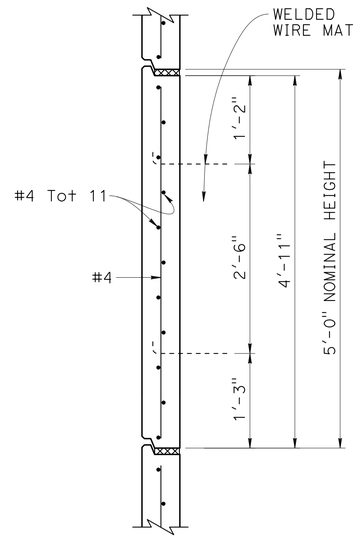

INTERMEDIATE PANEL
1" = 1'-0"

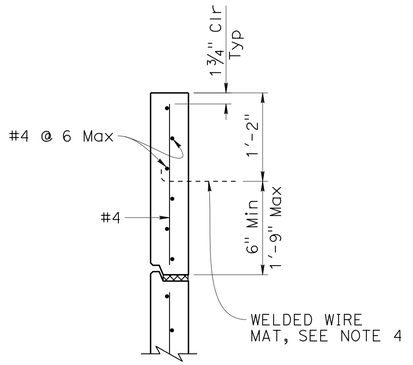

TOP HALF PANEL
1" = 1'-0"

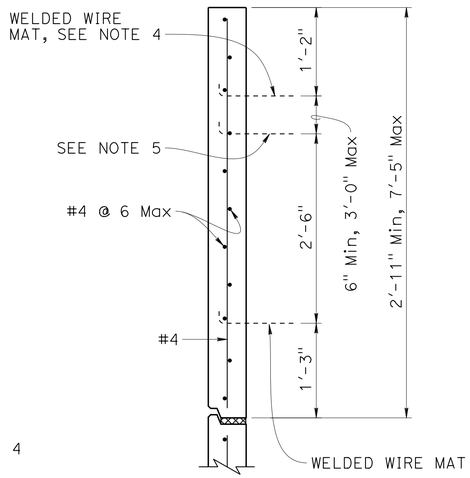

TOP PANEL WITH MULTIPLE MATS
1" = 1'-0"

DRAFT - NOT FOR CONSTRUCTION

REVISED BRIDGE STANDARD DETAILS		
xs13-020-1 FILE No.	April 2024 APPROVAL DATE	The components of the Bridge Standard Details have been prepared under the responsible charge of the Technical Owner, a registered civil engineer in the State of California

(1) Note added

STATE OF CALIFORNIA DEPARTMENT OF TRANSPORTATION

DIVISION OF ENGINEERING SERVICES

BRIDGE No. 36-XXXX

POST MILE X.X

SPECIAL DETAILS

RETAINING WALL No. 103

MECHANICALLY STABILIZED EMBANKMENT DETAILS No. 1

Refer to: http://www.dot.ca.gov/hq/esc/techpubs/manual/bridgemanuals/bridge-standard-detail-sheets/index.html

DATE PLOTTED => 3-APR-2025 TIME PLOTTED => 13:05
FILE => RW103_08_xs13-020-1.dgn USERNAME => etanaka

ORIGINAL SCALE IN INCHES FOR REDUCED PLANS 0 1 2 3

UNIT: XXXX COUNTY/ROUTE/ZONE: SCR/1
PROJECT NUMBER & PHASE: 05200000831 CONTRACT No.: 05-0C734

DISREGARD PRINTS BEARING EARLIER REVISION DATES

REVISION DATES				SHEET	OF
				8	17

Dist	COUNTY	ROUTE	POST MILES TOTAL PROJECT	SHEET No.	TOTAL SHEETS

REGISTERED CIVIL ENGINEER DATE

PLANS APPROVAL DATE

REGISTERED PROFESSIONAL ENGINEER
MARSHALL EUGENE MOORE
No. S6557
Exp. 09-30-25
STRUCTURAL
STATE OF CALIFORNIA

THE STATE OF CALIFORNIA OR ITS OFFICERS OR AGENTS SHALL NOT BE RESPONSIBLE FOR THE ACCURACY OR COMPLETENESS OF SCANNED COPIES OF THIS PLAN SHEET.

THE REGISTERED CIVIL ENGINEER FOR THE PROJECT IS RESPONSIBLE FOR THE SELECTION AND PROPER APPLICATION OF THE COMPONENT DESIGN AND ANY MODIFICATIONS SHOWN.

② GENERAL NOTES
LOAD AND RESISTANCE FACTOR DESIGN

DESIGN:
AASHTO LRFD Bridge Design Specifications, 2007 edition with California Amendments

LIVE LOADING:
2'-0" Live Load Surcharge

SEISMIC LOADING:
K_h = 0.2

REINFORCED CONCRETE:
f_y = 60 ksi
f'_c = 3.6 ksi

PRECAST CONCRETE PANELS:
f_y = 60 ksi
f'_c = 4.0 ksi

SOIL REINFORCEMENT:
Welded Wire Mats: F_y = 65 ksi
Coupler: F_y = 36 ksi
Corrosion rate = 1.1 mils/year

SOIL PARAMETERS:
Internal Design Φ = 34°, γ = 0.120 kip/ft
External Design Φ (Retained Backfill) = 30°, γ = 0.120 kip/ft
Φ (Foundation) = 30°

NOTES:

1. Distance as required to permit Coupler to be swaged.
2. Place #4 x 3'-2", centered on Connector Mat, but not welded to it.
3. All Transverse Wires size W15 at various spacing as shown elsewhere.
4. Size of Longitudinal Wires shown elsewhere.

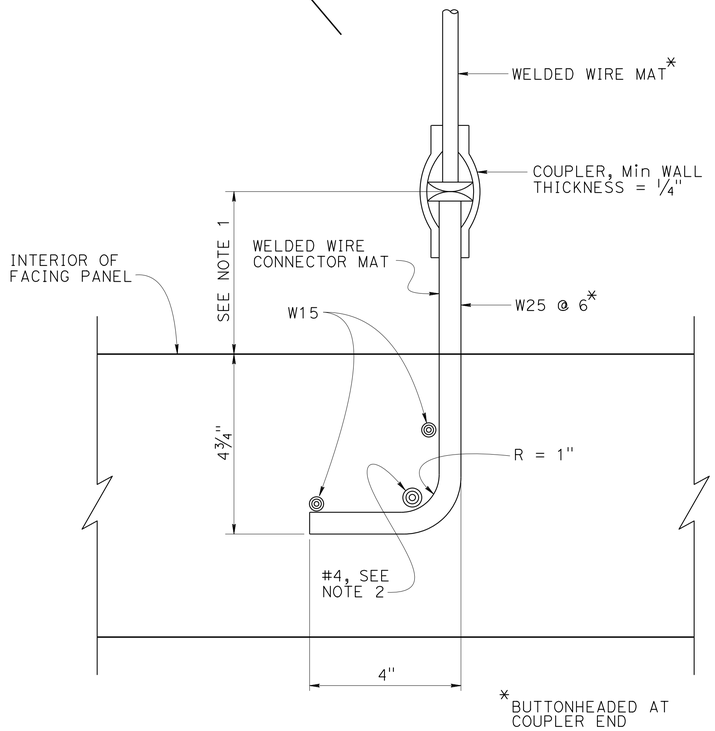

SECTION B-B
6" = 1'-0"

NOTE: Panel reinforcement not shown.

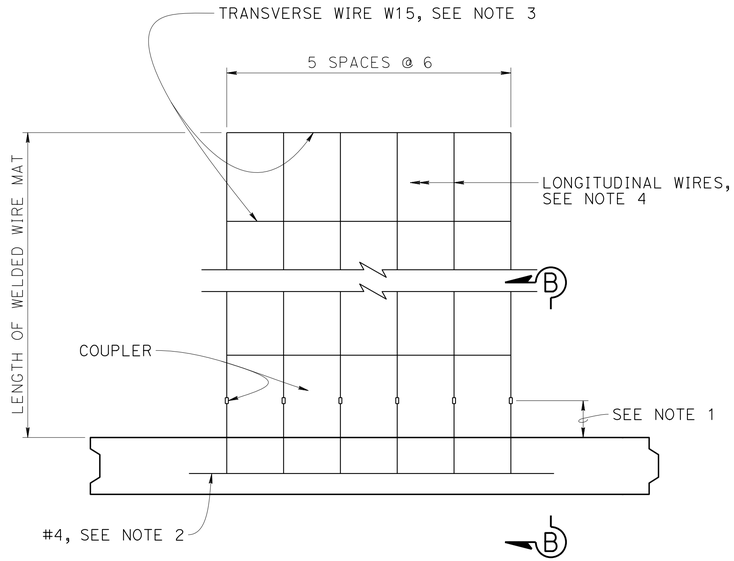

① NOTE: 5'-0" panel shown, shorter length similar.

PLAN (SIX WELDED WIRE MAT)
NO SCALE

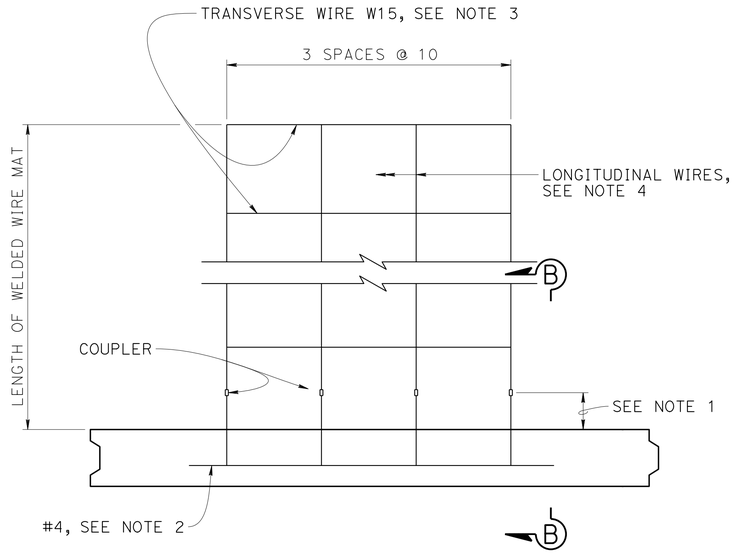

NOTE: 5'-0" panel shown, shorter length similar.

① PLAN (FOUR WELDED WIRE MAT)
NO SCALE

DRAFT- NOT FOR CONSTRUCTION

BRIDGE STANDARD DETAILS

xs13-020-2	April 2024	The components of the Bridge Standard Details have been prepared under the responsible charge of the Technical Owner, a registered civil engineer in the State of California
FILE No.	APPROVAL DATE	

① Note added
② Not used. See "GENERAL NOTES" sheet.

STATE OF CALIFORNIA
DEPARTMENT OF TRANSPORTATION

DIVISION OF ENGINEERING SERVICES

BRIDGE No. 36-XXXX
POST MILE X.X

SPECIAL DETAILS

RETAINING WALL No. 103

MECHANICALLY STABILIZED EMBANKMENT DETAILS No. 2

Refer to: http://www.dot.ca.gov/hq/esc/techpubs/manual/bridgemanuals/bridge-standard-detail-sheets/index.html

DATE PLOTTED => 3-APR-2025 TIME PLOTTED => 13:05
FILE => RW103_09_xs13-020-2.dgn USERNAME => etanaka

ORIGINAL SCALE IN INCHES FOR REDUCED PLANS 0 1 2 3

UNIT: XXXX COUNTY/ROUTE/ZONE: SCR/1
PROJECT NUMBER & PHASE: 05200000831 CONTRACT No.: 05-0C734

DISREGARD PRINTS BEARING EARLIER REVISION DATES →

REVISION DATES				SHEET	OF
				9	17

Dist	COUNTY	ROUTE	POST MILES TOTAL PROJECT	SHEET No.	TOTAL SHEETS

REGISTERED CIVIL ENGINEER DATE

PLANS APPROVAL DATE

REGISTERED PROFESSIONAL ENGINEER
MARSHALL EUGENE MOORE
No. S6557
Exp. 09-30-25
STRUCTURAL
STATE OF CALIFORNIA

THE STATE OF CALIFORNIA OR ITS OFFICERS OR AGENTS SHALL NOT BE RESPONSIBLE FOR THE ACCURACY OR COMPLETENESS OF SCANNED COPIES OF THIS PLAN SHEET.

THE REGISTERED CIVIL ENGINEER FOR THE PROJECT IS RESPONSIBLE FOR THE SELECTION AND PROPER APPLICATION OF THE COMPONENT DESIGN AND ANY MODIFICATIONS SHOWN.

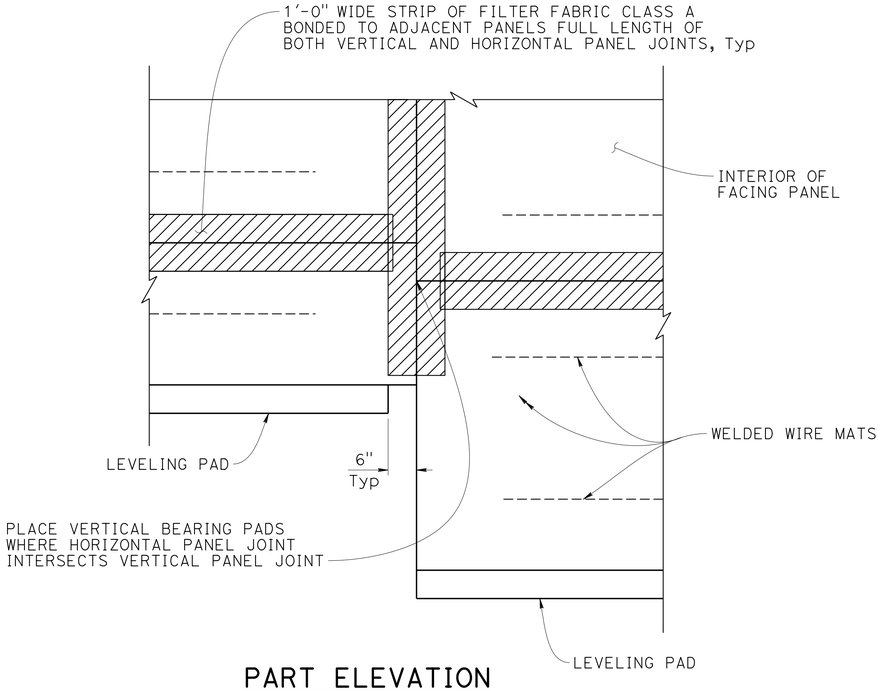

PART ELEVATION

3/4" = 1'-0"

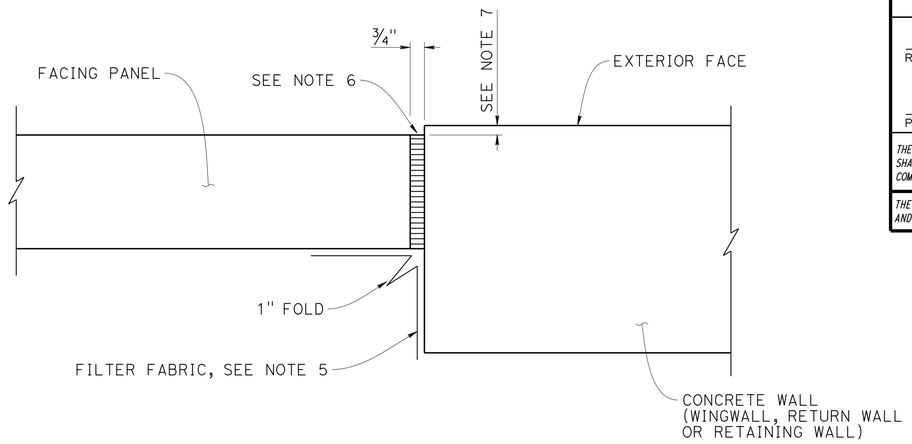

MSE FACING PANEL-TO-CONCRETE WALL JOINT DETAIL

3" = 1'-0"

NOTES:

1. Center inspection wire in Facing Panel.
2. Fabricate inspection wire from W11 wire representative of the welded wire mats, with 3/8"Ø-16 UNC threads for at least 1½" of one end.
3. Place inspection wire horizontal and perpendicular to the wall panel prior to backfilling.
4. Encapsulate threaded end with corrosion inhibiting mastic, vinyl covering, and secure with plastic tie.
5. Bond a strip of Filter Fabric Class A, 1'-6" wide, to back of MSE panels and the adjacent concrete wall for entire length of vertical joint.
6. Bond Expansion Joint Filler to the Concrete Wall.
7. Offset between face of MSE Facing Panel and face of the Concrete Wall as dictated by location of layout lines shown elsewhere.

LEGEND:

- Filter Fabric Class A
- Neoprene Plug
- Expansion Joint Filler
- UNC Unified Coarse Thread

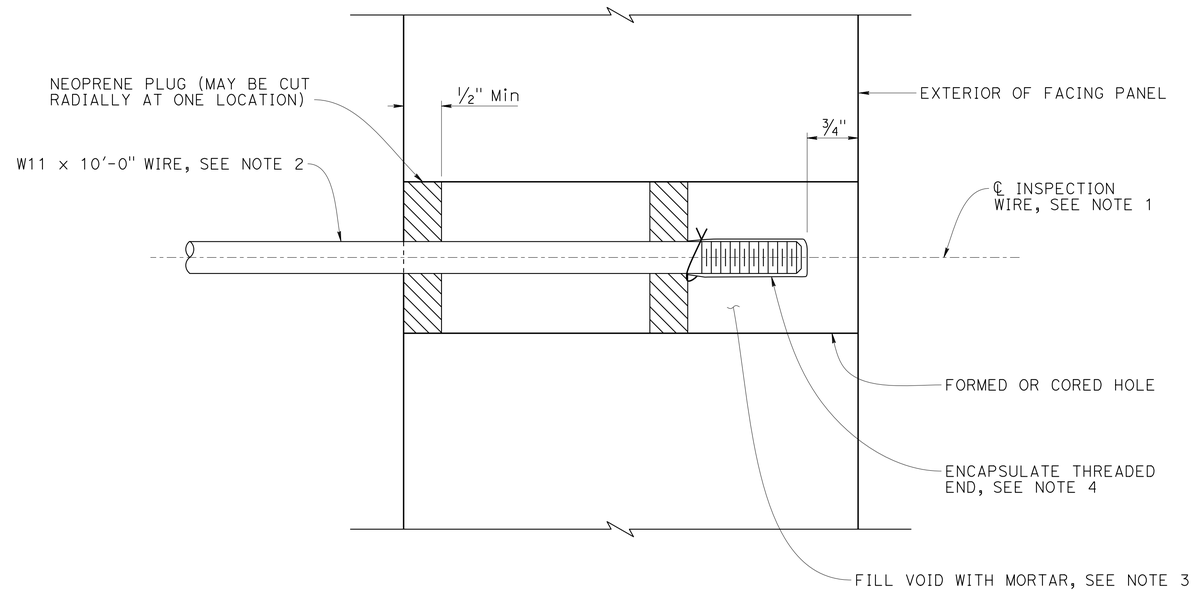

INSPECTION WIRE DETAIL

NO SCALE

DRAFT - NOT FOR CONSTRUCTION

BRIDGE STANDARD DETAILS

xs13-020-3	April 2024	*The components of the Bridge Standard Details have been prepared under the responsible charge of the Technical Owner, a registered civil engineer in the State of California*
FILE No.	APPROVAL DATE	

STATE OF CALIFORNIA
DEPARTMENT OF TRANSPORTATION

DIVISION OF ENGINEERING SERVICES

BRIDGE No. 36-XXXX
POST MILE X.X

SPECIAL DETAILS

RETAINING WALL No. 103

MECHANICALLY STABILIZED EMBANKMENT DETAILS No. 3

Refer to: http://www.dot.ca.gov/hq/esc/techpubs/manual/bridgemanuals/bridge-standard-detail-sheets/index.html

DATE PLOTTED => 3-APR-2025 TIME PLOTTED => 13:06
FILE => RW103_10_xs13-020-3.dgn USERNAME => etanaka

ORIGINAL SCALE IN INCHES FOR REDUCED PLANS 0 1 2 3

UNIT: XXXX COUNTY/ROUTE/ZONE: SCR/1
PROJECT NUMBER & PHASE: 05200000831 CONTRACT No.: 05-0C734

DISREGARD PRINTS BEARING EARLIER REVISION DATES →

REVISION DATES				SHEET	OF
				10	17

Dist	COUNTY	ROUTE	POST MILES TOTAL PROJECT	SHEET No.	TOTAL SHEETS
5	SCR	1	8.1/10.7	871	931

REGISTERED CIVIL ENGINEER DATE

PLANS APPROVAL DATE

REGISTERED PROFESSIONAL ENGINEER
MARSHALL EUGENE MOORE
No. S6557
Exp. 9-30-25
STRUCTURAL
STATE OF CALIFORNIA

THE STATE OF CALIFORNIA OR ITS OFFICERS OR AGENTS SHALL NOT BE RESPONSIBLE FOR THE ACCURACY OR COMPLETENESS OF SCANNED COPIES OF THIS PLAN SHEET.

SCCRTC
1523 PACIFIC AVE
SANTA CRUZ, CA 95060

MARK THOMAS
701 UNIVERSITY AVE, STE 200
SACRAMENTO, CA 95825

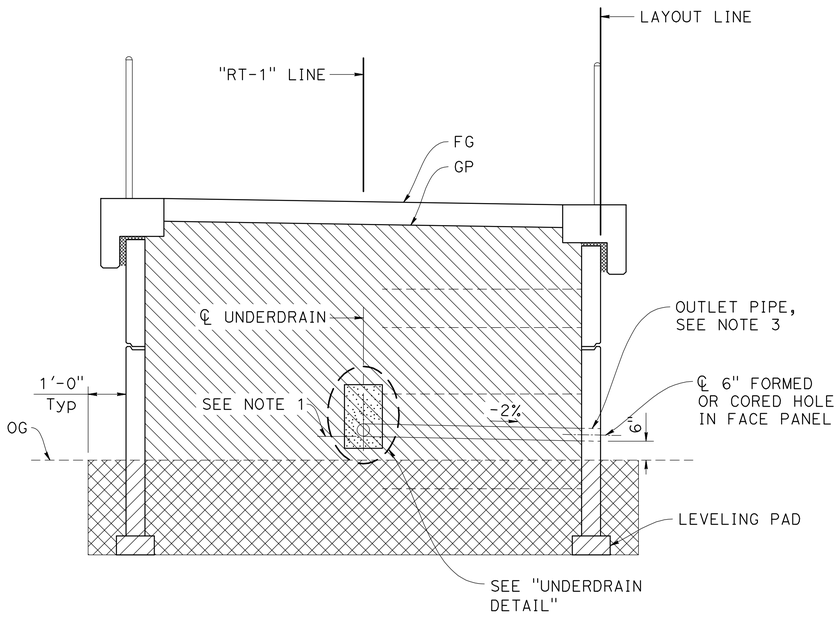

LIMITS OF EXCAVATION AND BACKFILL TWO WALLS

NO SCALE

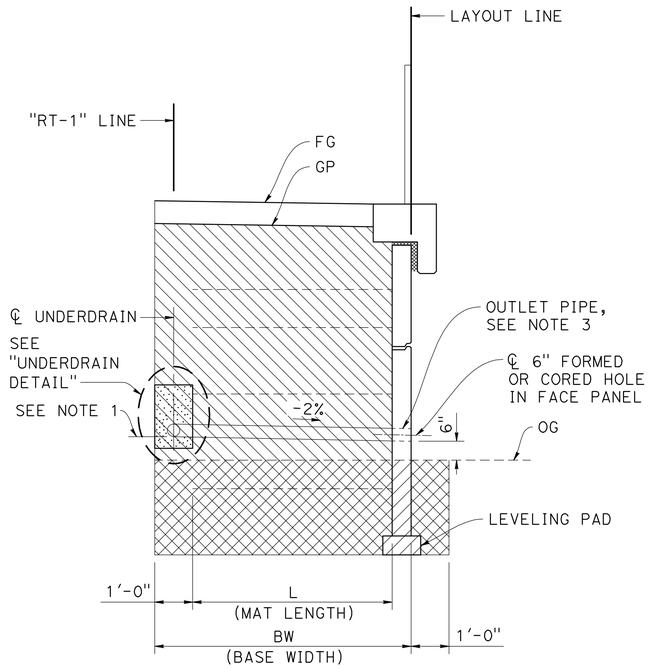

LIMITS OF EXCAVATION AND BACKFILL

NO SCALE

NOTES:

1. Locate underdrain behind bottom level of welded wire mats wherever possible, or at elevation needed to drain.
2. Place perforated pipe underdrain of diameter shown elsewhere on plans or minimum 4" ø smoothed wall PVC or minimum 8" ø corrugated HDPE.
3. Maximum spacing of Outlet Pipe and Cleanout Pipe is 200 feet.
4. At sags in profile of underdrain, install Outlet Pipe for each direction of flow.

LEGEND:

- Structure Excavation
- Structure Backfill
- Permeable Material

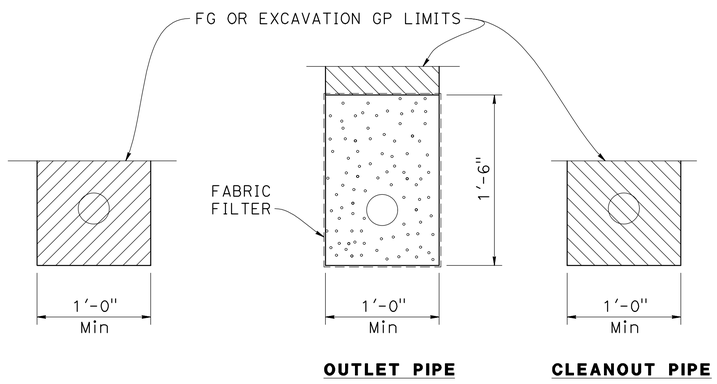

UNPERFORATED OUTLET OR CLEAN OUT PIPE FOR UNDERDRAIN

NO SCALE

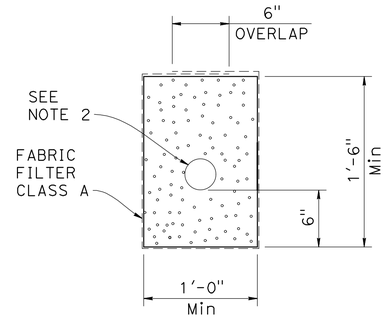

UNDERDRAIN DETAIL

NO SCALE

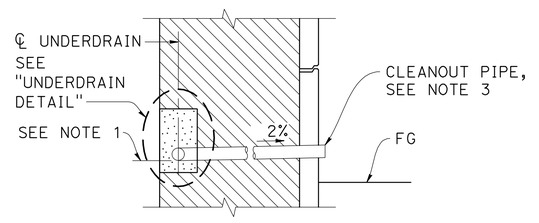

CLEANOUT DETAIL

NO SCALE

DRAFT - NOT FOR CONSTRUCTION

DESIGN OVERSIGHT		DESIGN	BY T. FAIR/M. MOORE	CHECKED J. SAMPSON	PREPARED FOR THE STATE OF CALIFORNIA DEPARTMENT OF TRANSPORTATION	M. MOORE PROJECT ENGINEER	BRIDGE No. N/A
SIGN OFF DATE		DETAILS	BY J. VALENZUELA	CHECKED M. MOORE			POST MILE N/A
		QUANTITIES	BY X	CHECKED X			

RETAINING WALL No. 103

MECHANICALLY STABILIZED EMBANKMENT DETAILS No. 4

STRUCTURES DESIGN DETAIL SHEET (ENGLISH) (REVISION 8/16/2021)

DATE PLOTTED => 4/3/2025
FILE => RW103_11_DT4.dwg

TIME PLOTTED => 1:40 PM
USERNAME => ETANAKA

ORIGINAL SCALE IN INCHES FOR REDUCED PLANS 0 1 2 3

PROJECT NUMBER & PHASE: 05200000831

COUNTY/ROUTE: SCR/1
CONTRACT No.: 05-0C734

DISREGARD PRINTS BEARING EARLIER REVISION DATES

REVISION DATES

SHEET 11 OF 17

Dist	COUNTY	ROUTE	POST MILES TOTAL PROJECT	SHEET No.	TOTAL SHEETS
5	SCR	1	8.1/10.7	872	931

REGISTERED CIVIL ENGINEER DATE

PLANS APPROVAL DATE

REGISTERED PROFESSIONAL ENGINEER — MARSHALL EUGENE MOORE — No. S6557 — Exp. 9-30-25 — STRUCTURAL — STATE OF CALIFORNIA

THE STATE OF CALIFORNIA OR ITS OFFICERS OR AGENTS SHALL NOT BE RESPONSIBLE FOR THE ACCURACY OR COMPLETENESS OF SCANNED COPIES OF THIS PLAN SHEET.

SCCRTC
1523 PACIFIC AVE
SANTA CRUZ, CA 95060

MARK THOMAS
701 UNIVERSITY AVE, STE 200
SACRAMENTO, CA 95825

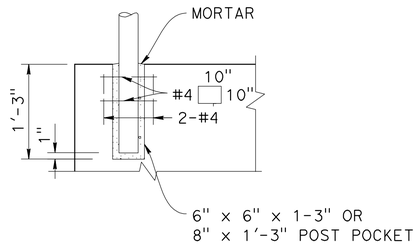

SIGN POST POCKET DETAIL

1" = 1'-0"

NOTES:

(A) 2" Expanded Polystyrene

(B) 1" Expanded Polystyrene

(C) See "SIGN PLANS" for sign post details and location.

(D) See "ELECTRICAL PLANS" for light post details and location.

(E) 2" conduit, for details, see "ELECTRICAL PLANS".

(F) Junction Box (Type 9), see "ELECTRICAL PLANS" and Standard Plan ES-9C.

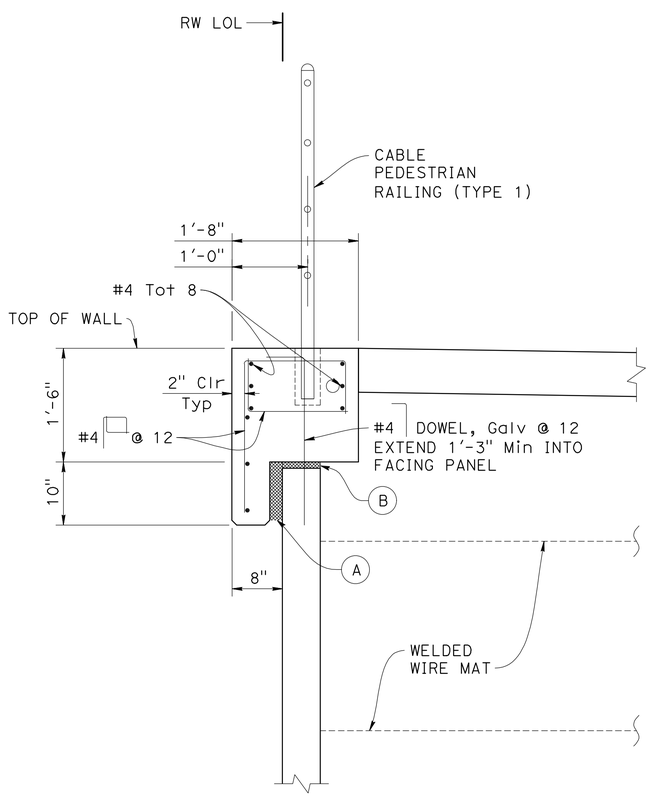

COPING AND PEDESTRIAN RAILING DETAIL

1" = 1'-0"

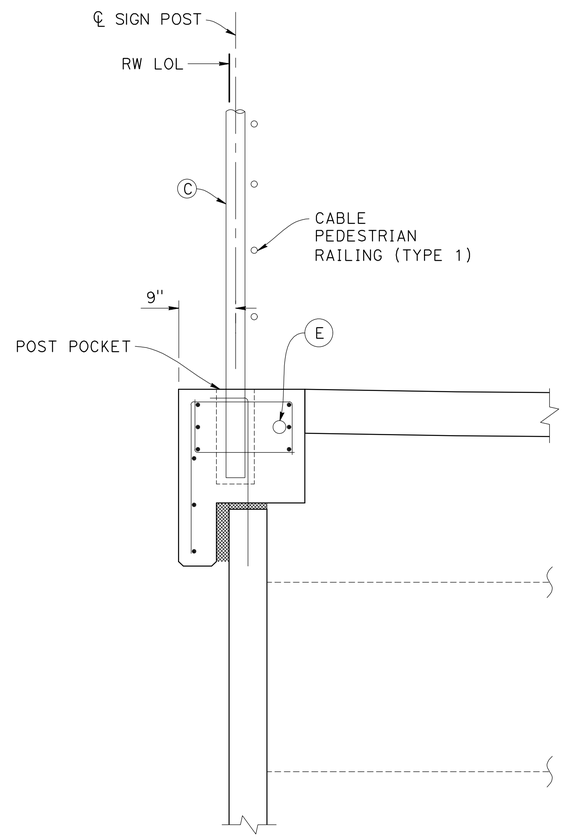

COPING AND SIGN POST DETAIL

1" = 1'-0"

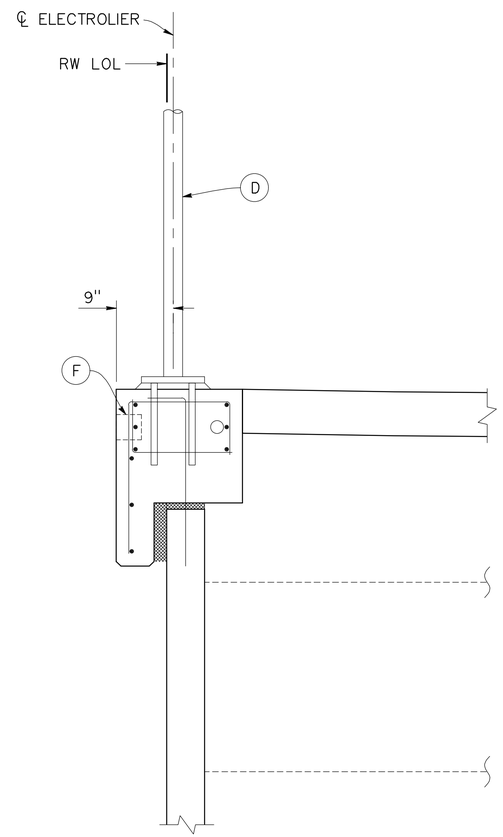

COPING AND ELECTROLIER DETAIL

1" = 1'-0"

NOTE: For details not shown see "COPING AND RAILING DETAILS"

DRAFT - NOT FOR CONSTRUCTION

DESIGN OVERSIGHT		DESIGN	BY T. FAIR/M. MOORE	CHECKED J. SAMPSON	PREPARED FOR THE STATE OF CALIFORNIA DEPARTMENT OF TRANSPORTATION
SIGN OFF DATE		DETAILS	BY J. VALENZUELA	CHECKED M. MOORE	
		QUANTITIES	BY X	CHECKED X	

M. MOORE
PROJECT ENGINEER

BRIDGE No.	RETAINING WALL No. 103
N/A	
POST MILE	MECHANICALLY STABILIZED EMBANKMENT DETAILS NO. 5
N/A	

STRUCTURES DESIGN DETAIL SHEET (ENGLISH) (REVISION 8/16/2021)

DATE PLOTTED => 4/3/2025
FILE => RW103_12_DT5.dwg

TIME PLOTTED => 1:41 PM
USERNAME => ETANAKA

ORIGINAL SCALE IN INCHES FOR REDUCED PLANS 0 1 2 3

PROJECT NUMBER & PHASE: 05200000831

COUNTY/ROUTE: SCR/1
CONTRACT No.: 05-0C734

DISREGARD PRINTS BEARING EARLIER REVISION DATES

REVISION DATES	SHEET	OF
	12	17

Dist	COUNTY	ROUTE	POST MILES TOTAL PROJECT	SHEET No.	TOTAL SHEETS
5	SCR	1	8.1/10.7	873	931

REGISTERED CIVIL ENGINEER DATE

REGISTERED PROFESSIONAL ENGINEER — MARSHALL EUGENE MOORE — No. S6557 — Exp. 9-30-25 — STRUCTURAL — STATE OF CALIFORNIA

PLANS APPROVAL DATE

THE STATE OF CALIFORNIA OR ITS OFFICERS OR AGENTS SHALL NOT BE RESPONSIBLE FOR THE ACCURACY OR COMPLETENESS OF SCANNED COPIES OF THIS PLAN SHEET.

SCCRTC
1523 PACIFIC AVE
SANTA CRUZ, CA 95060

MARK THOMAS
701 UNIVERSITY AVE, STE 200
SACRAMENTO, CA 95825

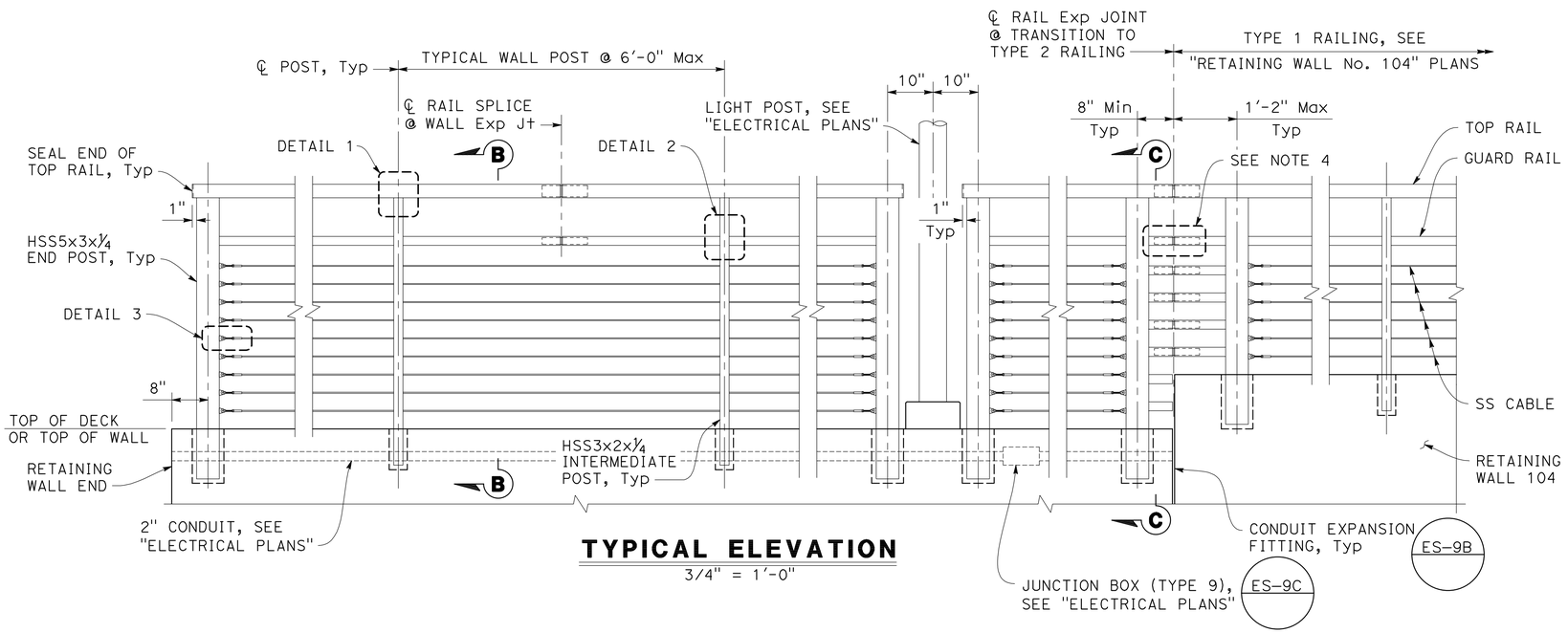

TYPICAL ELEVATION

3/4" = 1'-0"

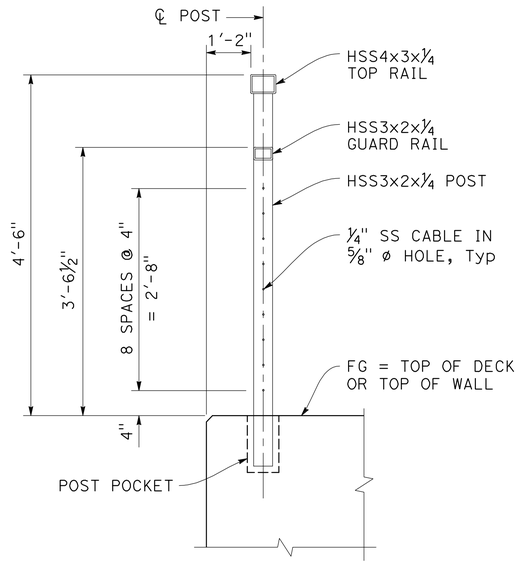

SECTION B-B

1" = 1'-0"

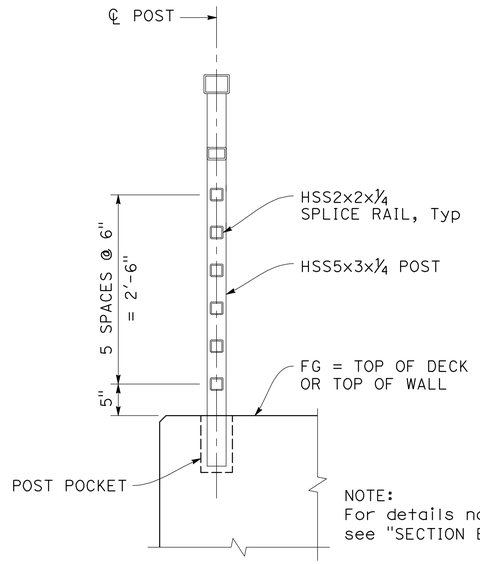

SECTION C-C

1" = 1'-0"

NOTES:

1. All components of the cable pedestrian railings must be hot dipped galvanized and finished with Natina stain.
2. All HSS members to comply with ASTM A500/A500m, Grade B. All other steel to comply with ASTM A36/A36M.
3. Orient tube seams to be on outside face of railing (i.e. not facing trail).
4. For cable pedestrian railing details and turnbuckle details, see "CABLE PEDESTRIAN RAILING DETAILS No. 2" sheet.

DRAFT - NOT FOR CONSTRUCTION

DESIGN OVERSIGHT		DESIGN	BY T. FAIR/M. MOORE	CHECKED J. SAMPSON	PREPARED FOR THE STATE OF CALIFORNIA DEPARTMENT OF TRANSPORTATION
SIGN OFF DATE		DETAILS	BY J. VALENZUELA	CHECKED M. MOORE	
		QUANTITIES	BY X	CHECKED X	

M. MOORE
PROJECT ENGINEER

BRIDGE No.	RETAINING WALL No. 103
N/A	
POST MILE	CABLE PEDESTRIAN RAILING (TYPE 1) DETAILS No. 1
N/A	

STRUCTURES DESIGN DETAIL SHEET (ENGLISH) (REVISION 8/16/2021)

DATE PLOTTED => 4/3/2025
FILE => RW103_13_CRDT1.dwg
TIME PLOTTED => 1:42 PM
USERNAME => ETANAKA
ORIGINAL SCALE IN INCHES FOR REDUCED PLANS 0 1 2 3

PROJECT NUMBER & PHASE: 05200000831
COUNTY/ROUTE: SCR/1
CONTRACT No.: 05-0C734

DISREGARD PRINTS BEARING EARLIER REVISION DATES

REVISION DATES				SHEET	OF
				13	17

Dist	COUNTY	ROUTE	POST MILES TOTAL PROJECT	SHEET No.	TOTAL SHEETS
5	SCR	1	8.1/10.7	874	931

REGISTERED CIVIL ENGINEER DATE

REGISTERED PROFESSIONAL ENGINEER — MARSHALL EUGENE MOORE — No. S6557 — Exp. 9-30-25 STRUCTURAL — STATE OF CALIFORNIA

PLANS APPROVAL DATE

THE STATE OF CALIFORNIA OR ITS OFFICERS OR AGENTS SHALL NOT BE RESPONSIBLE FOR THE ACCURACY OR COMPLETENESS OF SCANNED COPIES OF THIS PLAN SHEET.

SCCRTC
1523 PACIFIC AVE
SANTA CRUZ, CA 95060

MARK THOMAS
701 UNIVERSITY AVE, STE 200
SACRAMENTO, CA 95825

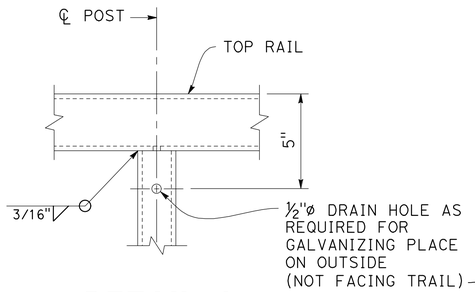

DETAIL 1
3" = 1'-0"

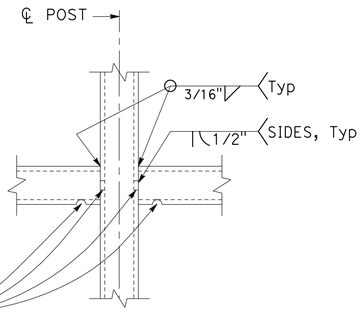

DETAIL 2
3" = 1'-0"

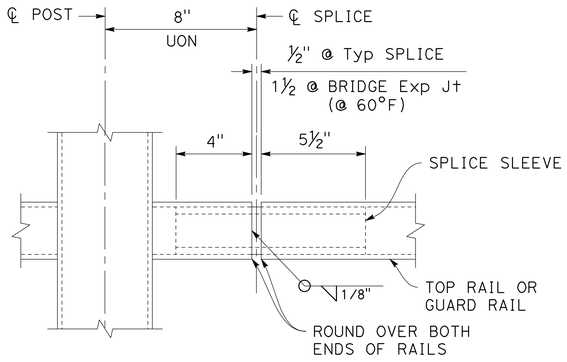

TYPICAL RAIL SPLICE DETAIL
3" = 1'-0"

NOTES:

1. For typical pedestrian bridge railing notes and for location of details, see "CABLE PEDESTRIAN RAILING DETAILS No. 1" sheet.
2. Cables must be spliced with turnbuckles spaced no more than 200 ft and not less than 50ft. turnbuckle must have minimum 1½" of adjustment and a minimum breaking load of 3500 lbs.
3. Submit cable product and fittings to engineer for review and approval. End fork connection plate dimensions to be adjusted to suit selected end fork product. Provide final dimensions when submitting fitting details.

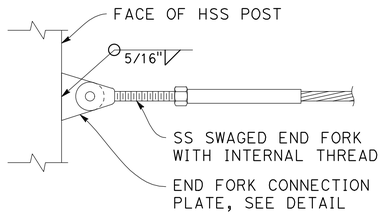

DETAIL 3
NO SCALE

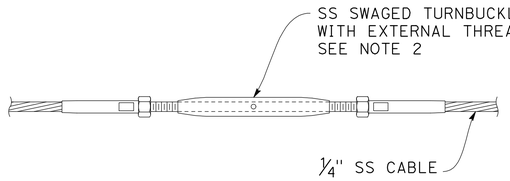

TYPICAL TURNBUCKLE DETAIL
NO SCALE

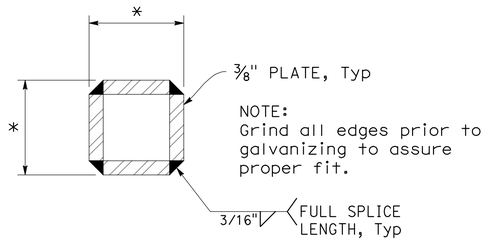

* The difference between the out-to-out rail splice sleeve dimensions and the clear inside dimensions of the tubular steel rail elements must not exceed 3/16" after galvanizing

SPLICE SLEEVE
NO SCALE

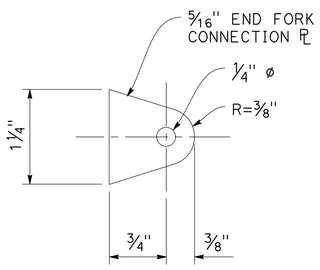

END FORK CONNECTION PLATE DETAIL
NO SCALE

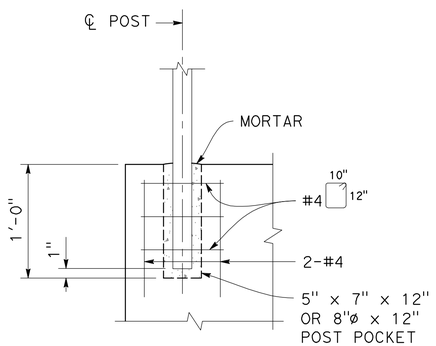

END POST POCKET DETAIL
NO SCALE

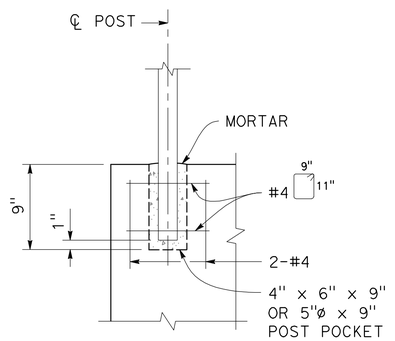

INTERMEDIATE POST POCKET DETAIL
NO SCALE

DRAFT - NOT FOR CONSTRUCTION

DESIGN OVERSIGHT

SIGN OFF DATE

	BY	CHECKED
DESIGN	T. FAIR/M. MOORE	J. SAMPSON
DETAILS	J. VALENZUELA	M. MOORE
QUANTITIES	X	X

PREPARED FOR THE STATE OF CALIFORNIA DEPARTMENT OF TRANSPORTATION

M. MOORE
PROJECT ENGINEER

BRIDGE No. N/A
POST MILE N/A

RETAINING WALL No. 103

CABLE PEDESTRIAN RAILING (TYPE 1) DETAILS No. 2

STRUCTURES DESIGN DETAIL SHEET (ENGLISH) (REVISION 8/16/2021)

DATE PLOTTED => 4/3/2025
FILE => RW103_114_CRDT2.dwg

TIME PLOTTED => 1:42 PM
USERNAME => ETANAKA

ORIGINAL SCALE IN INCHES FOR REDUCED PLANS 0 1 2 3

PROJECT NUMBER & PHASE: 05200000831

COUNTY/ROUTE: SCR/1
CONTRACT No.: 05-0C734

DISREGARD PRINTS BEARING EARLIER REVISION DATES

REVISION DATES

SHEET 14 OF 17

Dist	COUNTY	ROUTE	POST MILES TOTAL PROJECT	SHEET No.	TOTAL SHEETS
5	SCR	1	8.1/10.7	887	931

REGISTERED CIVIL ENGINEER DATE

PLANS APPROVAL DATE

REGISTERED PROFESSIONAL ENGINEER
MARSHALL EUGENE MOORE
No. S6557
Exp. 9-30-25
STRUCTURAL
STATE OF CALIFORNIA

THE STATE OF CALIFORNIA OR ITS OFFICERS OR AGENTS SHALL NOT BE RESPONSIBLE FOR THE ACCURACY OR COMPLETENESS OF SCANNED COPIES OF THIS PLAN SHEET.

SCCRTC
1523 PACIFIC AVE
SANTA CRUZ, CA 95060

MARK THOMAS
701 UNIVERSITY AVE, STE 200
SACRAMENTO, CA 95825

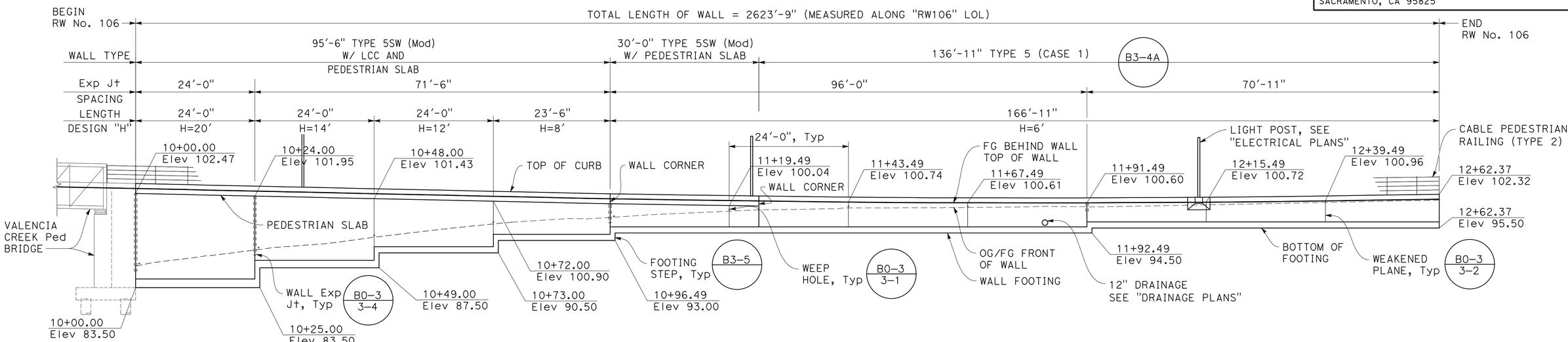

DEVELOPED ELEVATION

1' = 10'

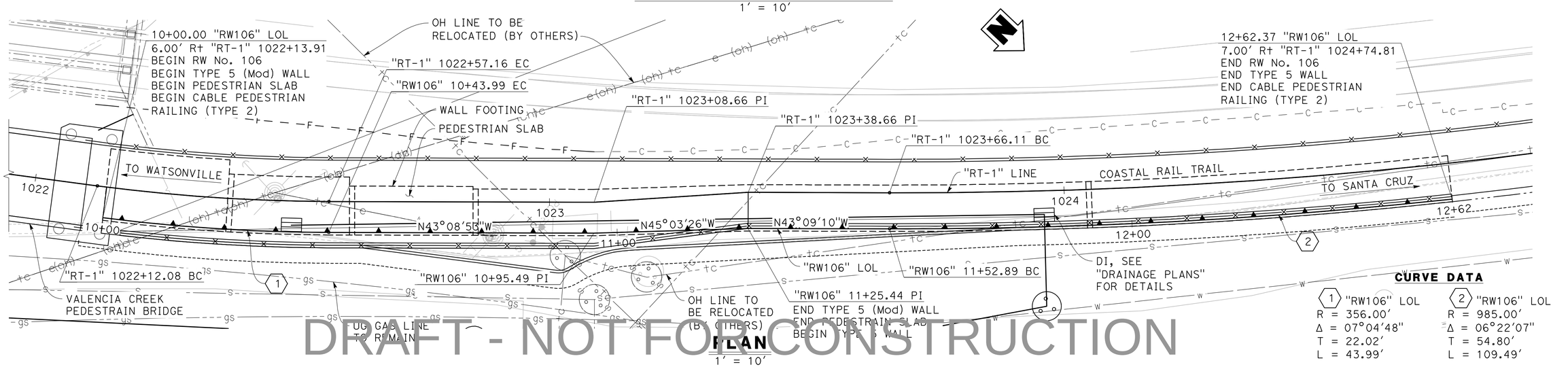

PLAN

1' = 10'

CURVE DATA

1 "RW106" LOL	2 "RW106" LOL
R = 356.00'	R = 985.00'
Δ = 07°04'48"	Δ = 06°22'07"
T = 22.02'	T = 54.80'
L = 43.99'	L = 109.49'

DRAFT - NOT FOR CONSTRUCTION

DESIGN OVERSIGHT	DESIGN	BY M. MOORE	CHECKED T. PHAM	SEISMIC ANALYSIS	BY X	CHECKED X	PREPARED FOR THE STATE OF CALIFORNIA DEPARTMENT OF TRANSPORTATION	M. MOORE PROJECT ENGINEER	BRIDGE No. N/A	RETAINING WALL No. 106
SIGN OFF DATE	DETAILS	BY J. VALENZUELA	CHECKED M. MOORE	LAYOUT	BY X	CHECKED X			POST MILE N/A	GENERAL PLAN
	QUANTITIES	BY X	CHECKED X	SPECIFICATIONS	BY X	PLANS AND SPECS COMPARED X				

STRUCTURES DESIGN GENERAL PLAN SHEET (ENGLISH) (REVISION 2/8/2022)

DATE PLOTTED => 4/4/2025
FILE => RW106_01-GP.dwg
TIME PLOTTED => 11:28 AM
USERNAME => ETANAKA
ORIGINAL SCALE IN INCHES FOR REDUCED PLANS 0 1 2 3

PROJECT NUMBER & PHASE:05200000831
COUNTY/ROUTE: SCR/1
CONTRACT No.: 05-0C734

DISREGARD PRINTS BEARING EARLIER REVISION DATES

REVISION DATES				SHEET	OF
				1	11

Dist	COUNTY	ROUTE	POST MILES TOTAL PROJECT	SHEET No.	TOTAL SHEETS
5	SCR	1	8.1/10.7	888	931

REGISTERED CIVIL ENGINEER DATE

PLANS APPROVAL DATE

REGISTERED PROFESSIONAL ENGINEER — MARSHALL EUGENE MOORE — No. S6557 — Exp. 9-30-25 — STRUCTURAL — STATE OF CALIFORNIA

THE STATE OF CALIFORNIA OR ITS OFFICERS OR AGENTS SHALL NOT BE RESPONSIBLE FOR THE ACCURACY OR COMPLETENESS OF SCANNED COPIES OF THIS PLAN SHEET.

SCCRTC
1523 PACIFIC AVE
SANTA CRUZ, CA 95060

MARK THOMAS
701 UNIVERSITY AVE, STE 200
SACRAMENTO, CA 95825

QUANTITIES

STRUCTURE EXCAVATION (RETAINING WALL)	596	CY
STRUCTURE BACKFILL (RETAINING WALL)	531	CY
LIGHTWEIGHT CELLULAR CONCRETE	177	CY
STRUCTURAL CONCRETE, RETAINING WALL	242	CY
BAR REINFORCING STEEL (RETAINING WALL)	43,365	LB
CABLE PEDESTRIAN RAILING (TYPE 2)	211	LF

INDEX TO PLANS

SHEET No.	TITLE
1	GENERAL PLAN
2	INDEX TO PLANS
3	RETAINING WALL TYPE 5SW Mod - DETAILS No. 1
4	RETAINING WALL TYPE 5SW Mod - DETAILS No. 2
5	PEDESTRIAN SLAB DETAILS
6	RETAINING WALL TYPE 5 LIGHT POST DETAILS
7	CABLE PEDESTRIAN RAILING (TYPE 2) DETAILS No. 1
8	CABLE PEDESTRIAN RAILING (TYPE 2) DETAILS No. 2
9	DRAINAGE DETAILS
10	LOG OF TEST BORING 1 OF 2
11	LOG OF TEST BORING 2 OF 2

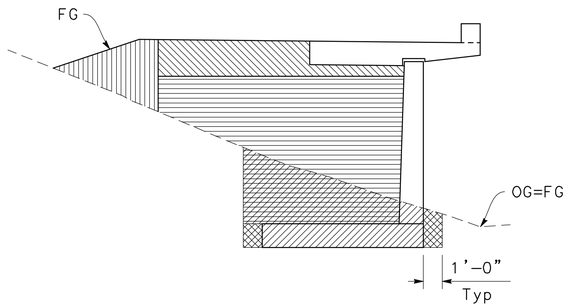

LIMITS OF PAYMENT FOR STRUCTURE EXCAVATION AND BACKFILL W/ LCC

NO SCALE

- LIGHTWEIGHT CELLULAR CONCRETE BACKFILL
- STRUCTURE BACKFILL (RETAINING WALL)
- STRUCTURE EXCAVATION (RETAINING WALL)
- ROADWAY EMBANKMENT

LIGHTWEIGHT CELLULAR CONCRETE FILL (LCC)

CLASS:	II	
CAST DENSITY:	36	PCF
COMPRESSICE STRENTH @ 28 DAYS =	80	PSI

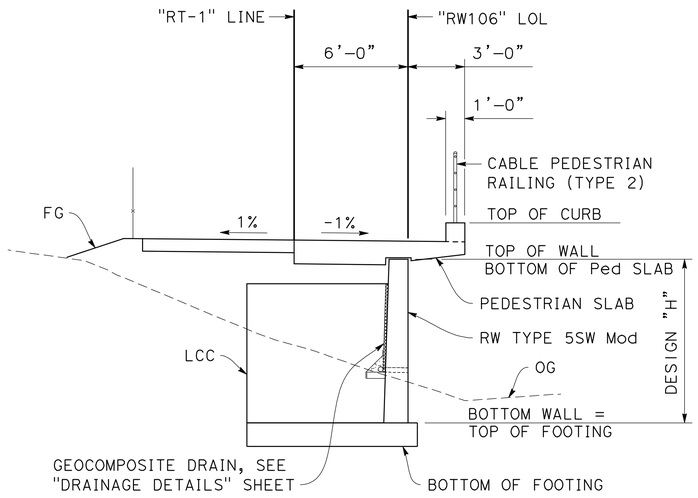

TYPICAL SECTION - TYPE 5SW (Mod) WITH LCC & PEDESTRIAN SLAB

1/4" = 1'-0"

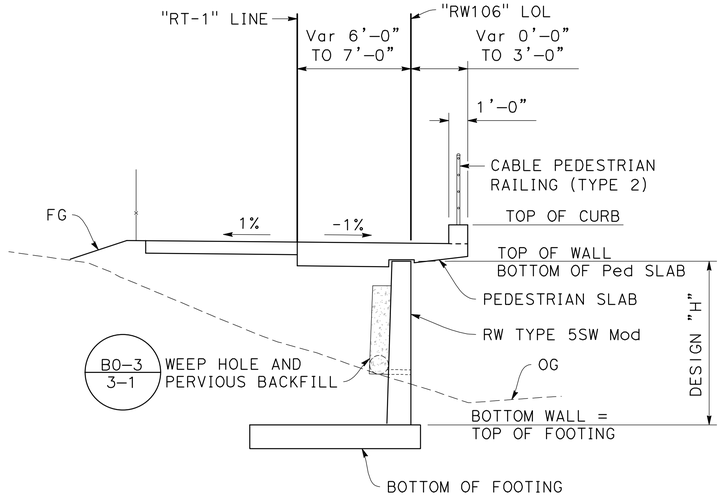

TYPICAL SECTION - TYPE 5SW (Mod) WITH PEDESTRIAN SLAB

1/4" = 1'-0"

A62B

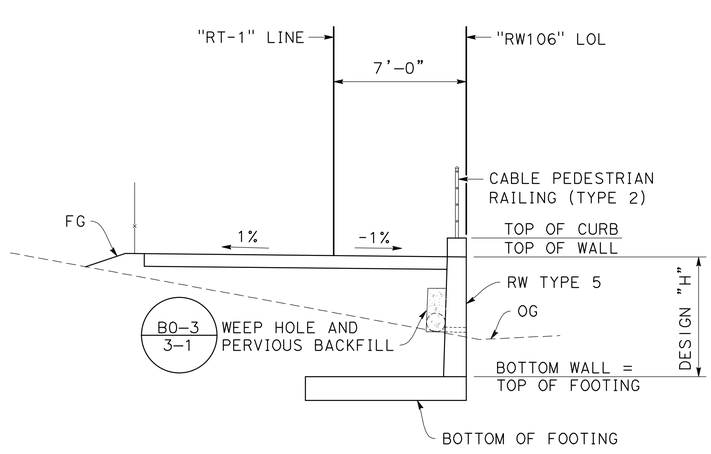

TYPICAL SECTION - TYPE 5

1/4" = 1'-0"

A62B

DRAFT - NOT FOR CONSTRUCTION

DESIGN OVERSIGHT	DESIGN	BY M. MOORE	CHECKED T. PHAM	PREPARED FOR THE STATE OF CALIFORNIA DEPARTMENT OF TRANSPORTATION	M. MOORE, PROJECT ENGINEER
SIGN OFF DATE	DETAILS	BY J. VALENZUELA	CHECKED M. MOORE		BRIDGE No. N/A; POST MILE N/A
	QUANTITIES	BY X	CHECKED X		RETAINING WALL No. 106 — INDEX TO PLANS

STRUCTURES DESIGN DETAIL SHEET (ENGLISH) (REVISION 8/16/2021)

DATE PLOTTED => 4/4/2025 TIME PLOTTED => 7:17 AM
FILE => RW106_02-ITP.dwg USERNAME => ETANAKA

ORIGINAL SCALE IN INCHES FOR REDUCED PLANS 0 1 2 3

PROJECT NUMBER & PHASE: 05200000831 COUNTY/ROUTE: SCR/1 CONTRACT No.: 05-0C734

DISREGARD PRINTS BEARING EARLIER REVISION DATES →

REVISION DATES | SHEET 2 | OF 11

DIST	COUNTY	ROUTE	POST MILES TOTAL PROJECT	SHEET No.	TOTAL SHEETS
				889	931

REGISTERED CIVIL ENGINEER DATE

PLANS APPROVAL DATE

REGISTERED PROFESSIONAL ENGINEER — MARSHALL EUGENE MOORE — No. S6557 — Exp. 09-30-25 STRUCTURAL — STATE OF CALIFORNIA

The State of California or its officers or agents shall not be responsible for the accuracy or completeness of scanned copies of this plan sheet.

The Registered Civil Engineer for the project is responsible for the selection and proper application of the component design and any modifications shown.

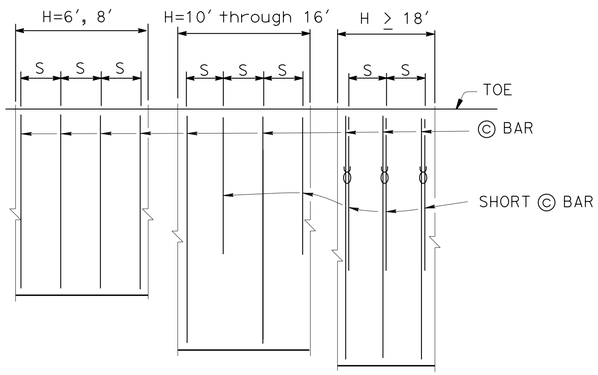

PLAN
NO SCALE

NOTES:
Only Ⓒ bars shown
"S" is Ⓒ bar spacing, see table
X: 2 bar bundle

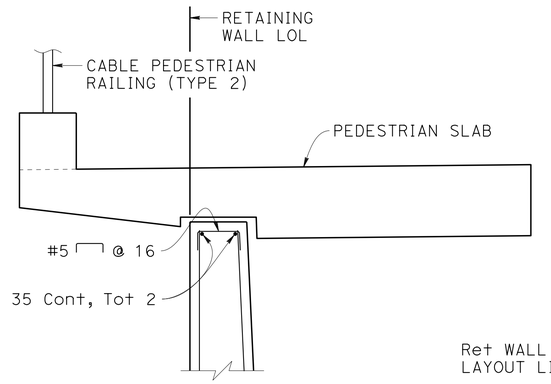

① DETAIL A
1" = 1′-0"

NOTES:
1. For ~~sound wall and~~ retaining wall architectural finish or texture see details elsewhere in Project Plans.
2. For details not shown and drainage notes, see B3-5
3. Footing cover, 1′-6" minimum
4. ~~For sound wall reinforcement, see "SOUND WALL MASONRY BLOCK ON RETAINING WALL" sheet~~

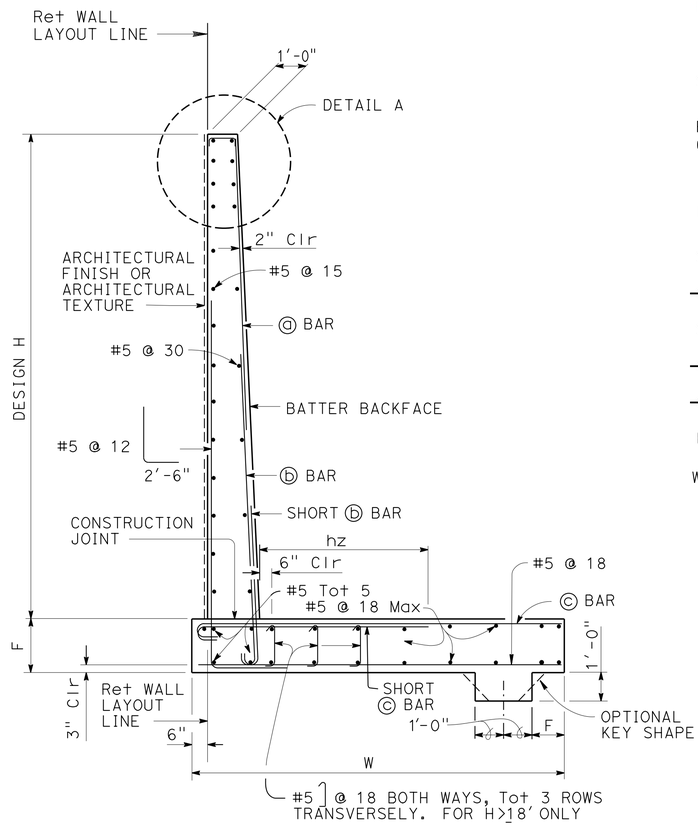

① SPREAD FOOTING SECTION
3/8" = 1′-0"

DESIGN DATA

Design: AASHTO LRFD Bridge Design Specifications 4th edition with California Amendments

~~WS: 33 psf on sound wall~~

LS: Varied surcharge on level ground surface

EQE: Mononabe-Okabe Method
K_h = 0.3
K_v = 0.0

Soil: ø = 34°
γ = 120 pcf

Reinforced Concrete: f′c = 3600 psi
fy = 60,000 psi

Load Combinations and Limit States

Service I	Q=1.00DC+1.00EV+1.00EH+1.00LS+0.30WS
~~Service II~~	~~Q=1.00DC+1.00EV+1.00EH+1.00WS~~
Strength I	Q=aDC+BEV+1.50EH+1.75LS
~~Strength III~~	~~Q=aDC+BEV+1.50EH+1.40WS~~
~~Strength V~~	~~Q=aDC+BEV+1.50EH+1.35LS+0.40WS~~
Extreme I	Q=1.00DC+1.00EV+1.00EH+1.00EQD+1.00EQE

Where:

Q: Force Effects
a: 1.25 or 0.90, Which ever Controls Design
B: 1.35 or 1.00, which ever Controls Design
DC: Dead Load of Structure Components
EV: Vertical Earth Fill Pressure
LS: Live Load Surcharge
EQE: Seismic Earth Pressure
EQD: Soil and Structure Components Inertia. Soil inertia ignored for stem design
~~WS: Wind Load on Sound Wall and Barrier~~

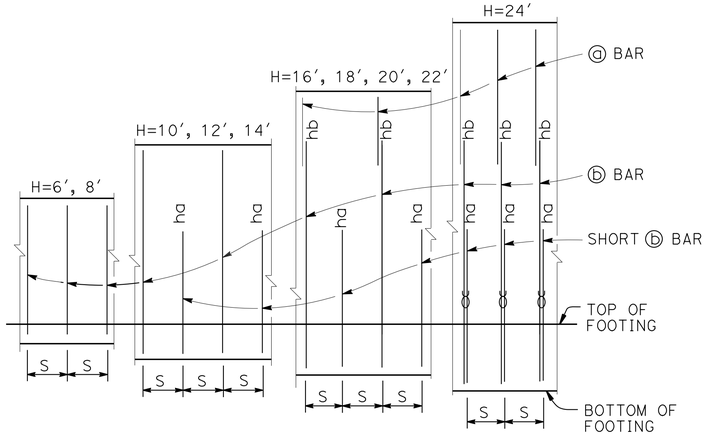

ELEVATION
NO SCALE

NOTES:
"ha" and "hb" above ⓑ bars indicate distance from top of footing to upper end of ⓑ bars, see table.
"S" is ⓑ bar spacing, see table.
X : 2 bar bundle

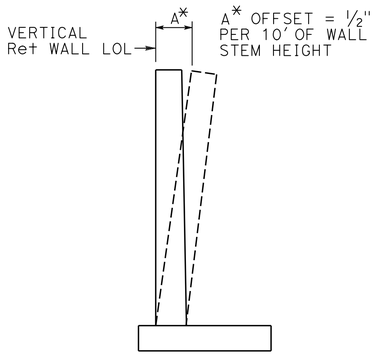

WALL OFFSET
No scale

DRAFT - NOT FOR CONSTRUCTION

BRIDGE STANDARD DETAILS		
xs14-340-1	July 2014	*The components of the Bridge Standard Details have been prepared under the responsible charge of the Technical Owner, a registered civil engineer in the State of California*
FILE NO.	APPROVAL DATE	

① Modified detail

STATE OF CALIFORNIA
DEPARTMENT OF TRANSPORTATION

DIVISION OF ENGINEERING SERVICES

BRIDGE NO.	N/A
POST MILE	N/A

SPECIAL DETAILS

RETAINING WALL No. 106

RETAINING WALL TYPE 5SW-DETAILS NO. 1

Refer to: http://www.dot.ca.gov/hq/esc/techpubs/manual/bridgemanuals/bridge-standard-detail-sheets/index.html

FILE => RW106_03-xs-340-1.dgn
USERNAME => etanaka TIME PLOTTED => 07:33 DATE PLOTTED => 4-APR-2025

ORIGINAL SCALE IN INCHES FOR REDUCED PLANS 0 1 2 3

UNIT:
PROJECT NUMBER & PHASE: 05200000831 CONTRACT NO.: 05-0C734

DISREGARD PRINTS BEARING EARLIER REVISION DATES →

REVISION DATES				SHEET	OF
6-19-14	7-14-16			3	11

DIST	COUNTY	ROUTE	POST MILES TOTAL PROJECT	SHEET No.	TOTAL SHEETS
				890	931

REGISTERED CIVIL ENGINEER DATE

PLANS APPROVAL DATE

REGISTERED PROFESSIONAL ENGINEER
MARSHALL EUGENE MOORE
No. S6557
Exp. 09-30-25
STRUCTURAL
STATE OF CALIFORNIA

The State of California or its officers or agents shall not be responsible for the accuracy or completeness of scanned copies of this plan sheet.

The Registered Civil Engineer for the project is responsible for the selection and proper application of the component design and any modifications shown.

① TABLE OF REINFORCING STEEL DIMENSIONS AND DATA

DESIGN H	6′	8′	10′	12′	14′	16′	18′	20′	22′	24′
W	9′-0"	9′-0"	9′-6"	10′-6"	12′-6"	12′-9"	14′-0"	18′-0"	17′-3"	18′-9"
F SPREAD FOOTING	1′-3"	1′-3"	1′-3"	1′-3"	1′-6"	1′-9"	1′-9"	2′-3"	2′-6"	2′-6"
BATTER	0	1/2:12	1/2:12	1/2:12	1/2:12	1/2:12	5/8:12	5/8:12	5/8:12	3/4:12
ⓐBARS						#7 @ 15	#7 @ 12	#7 @ 12	#8 @ 12	#6 @ 6
ⓑBARS	#8 @ 12	#8 @ 12	#7 @ 6	#7 @ 6	#7 @ 6	#9 @ 7.5	#9 @ 6	#10 @ 6	#10 @ 6	#8 @ 6 ϑ
ha			5′-0"	6′-0"	7′-0"	7′-0"	6′-0"	7′-0"	6′-9"	7′-6"
hb						11′-6"	12′-0"	13′-3"	16′-0"	15′-6"
ⓒBARS	#7 @ 12	#8 @ 12	#7 @ 6	#9 @ 6	#9 @ 6	#11 @ 7.5	#8 @ 6 ϑ	#9 @ 6 ϑ	#9 @ 6 ϑ	#10 @ 6 ϑ
hz			3′-6"	4′-0"	4′-9"	7′-0"	5′-9"	6′-9"	7′-6"	9′-0"
SER I: B′(ft), q_o'(ksf)	7.5, 1.5	6.9, 1.1	7.2, 2.2	6.7, 1.6	8.0, 1.8	9.6, 3.0	10.6, 3.3	9.9, 2.9	13.3, 3.9	14.6, 4.1
STR, Ia: B′(ft), q_o(ksf)	7.9, 2.9	6.8, 1.4	7.4, 3.7	6.2, 2.2	7.3, 2.4	9.5, 4.8	10.5, 5.0	9.9, 3.3	13.1, 6.0	14.3, 6.4
STR, Ib: B′(ft), q_o(ksf)	6.0, 2.0	7.0, 1.5	5.6, 2.9	6.7, 2.2	8.0, 2.5	7.6, 3.9	8.7, 4.1	11.1, 3.3	11.0, 4.9	12.1, 5.2
~~STR, IIIa: B′(ft), q_o(ksf)~~	~~6.0, 2.7~~	~~6.0, 3.0~~	~~6.4, 3.4~~	~~4.5, 2.4~~	~~5.5, 2.5~~	~~9.1, 4.4~~	~~10.2, 4.6~~	~~8.1, 3.2~~	~~12.9, 5.4~~	~~14.2, 5.7~~
~~STR, IIIb: B′(ft), q_o(ksf)~~	~~5.3, 2.5~~	~~5.2, 2.8~~	~~5.5, 3.1~~	~~7.9, 1.6~~	~~9.6, 1.7~~	~~8.0, 3.5~~	~~8.9, 4.0~~	~~14.2, 2.2~~	~~11.5, 4.7~~	~~12.7, 5.0~~
~~STR, Va: B′(ft), q_o(ksf)~~	~~7.5, 2.8~~	~~7.1, 3.2~~	~~7.2, 3.5~~	~~5.4, 2.2~~	~~6.5, 2.4~~	~~9.4, 4.6~~	~~10.4, 4.9~~	~~9.1, 3.1~~	~~13.0, 5.8~~	~~14.3, 6.1~~
~~STR, Vb: B′(ft), q_o(ksf)~~	~~5.7, 2.2~~	~~5.3, 2.6~~	~~5.4, 3.0~~	~~8.3, 1.7~~	~~10.0, 1.8~~	~~7.7, 3.9~~	~~8.7, 4.0~~	~~14.5, 2.3~~	~~11.1, 4.9~~	~~12.2, 5.1~~
Ext I: B′(ft), q_o(ksf)	4.0, 3.4	3.0, 4.7	2.5, 6.5	2.1, 4.8	2.8, 4.7	2.1, 14.4	2.3, 16.9	4.5, 5.7	2.9, 18.4	3.3, 19.3

LEGEND:

SER: service limit state
STR: strength limit state
EXT: extreme event limit state
B′: effective footing width (ft)
q_o': net bearing stress (ksf)
q_o: gross uniform bearing stress (ksf)

ϑ : 2 bar bundle

DRAFT - NOT FOR CONSTRUCTION

BRIDGE STANDARD DETAILS

xs14-340-2 (FILE NO.) | July 2014 (APPROVAL DATE)

The components of the Bridge Standard Details have been prepared under the responsible charge of the Technical Owner, a registered civil engineer in the State of California

Refer to: http://www.dot.ca.gov/hq/esc/techpubs/manual/bridgemanuals/bridge-standard-detail-sheets/index.html

① Modified detail

FILE => RW106_04-xs-340-2.dgn
USERNAME => etanaka TIME PLOTTED => 07:31 DATE PLOTTED => 4-APR-2025

ORIGINAL SCALE IN INCHES FOR REDUCED PLANS 0 1 2 3

STATE OF CALIFORNIA
DEPARTMENT OF TRANSPORTATION

DIVISION OF ENGINEERING SERVICES

BRIDGE NO. N/A
POST MILE N/A

UNIT:
PROJECT NUMBER & PHASE: 05200000831 CONTRACT NO.: 05-0C734

DISREGARD PRINTS BEARING EARLIER REVISION DATES →

SPECIAL DETAILS

RETAINING WALL No. 106

RETAINING WALL TYPE 5SW-DETAILS NO. 2

REVISION DATES				SHEET	OF
~~6-19-14~~	7-14-16			4	11

Dist	COUNTY	ROUTE	POST MILES TOTAL PROJECT	SHEET No.	TOTAL SHEETS
5	SCR	1	8.1/10.7	891	931

REGISTERED CIVIL ENGINEER DATE

PLANS APPROVAL DATE

REGISTERED PROFESSIONAL ENGINEER
MARSHALL EUGENE MOORE
No. S6557
Exp. 9-30-25
STRUCTURAL
STATE OF CALIFORNIA

THE STATE OF CALIFORNIA OR ITS OFFICERS OR AGENTS SHALL NOT BE RESPONSIBLE FOR THE ACCURACY OR COMPLETENESS OF SCANNED COPIES OF THIS PLAN SHEET.

SCCRTC
1523 PACIFIC AVE
SANTA CRUZ, CA 95060

MARK THOMAS
701 UNIVERSITY AVE, STE 200
SACRAMENTO, CA 95825

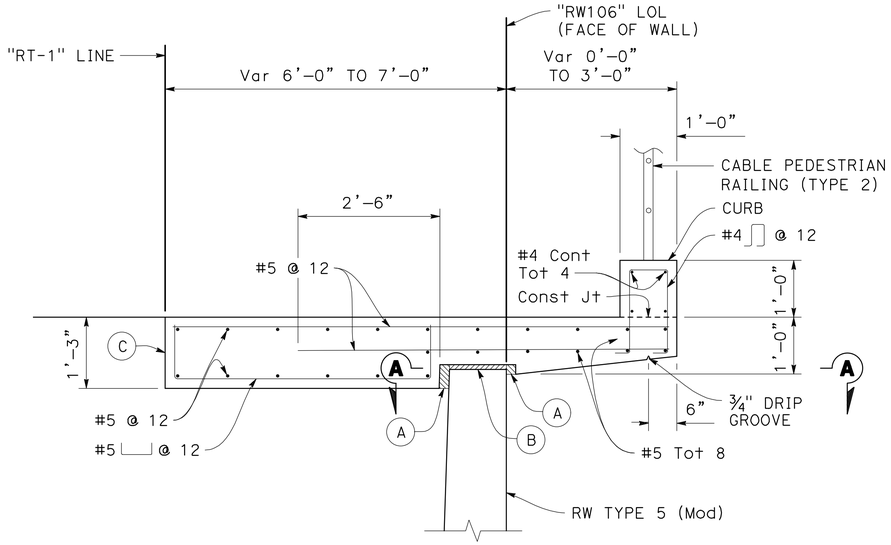

PEDESTRIAN SLAB DETAIL

3/4" = 1'-0"

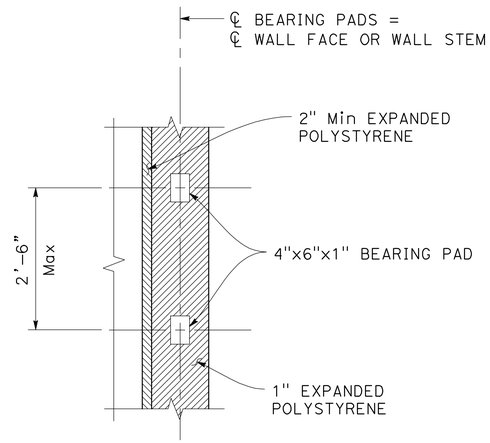

SECTION A-A

3/4" = 1'-0"

NOTES:

(A) 2" Min Expanded Polystyrene

(B) 1" Expanded Polystyrene

(C) Longitudinal Construction Joint

1. No expansion joints in pedestrian slab within wall limits.

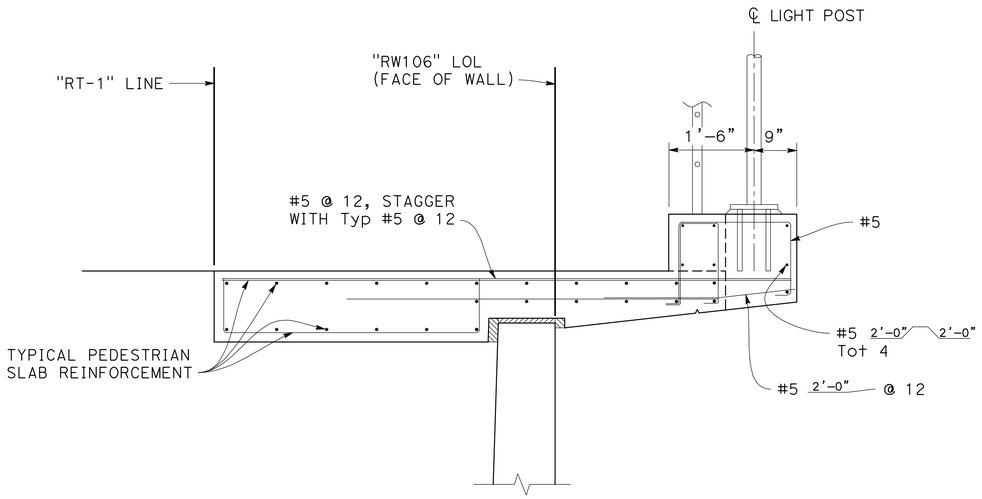

PEDESTRIAN SLAB AT LIGHT POST

3/4" = 1'-0"

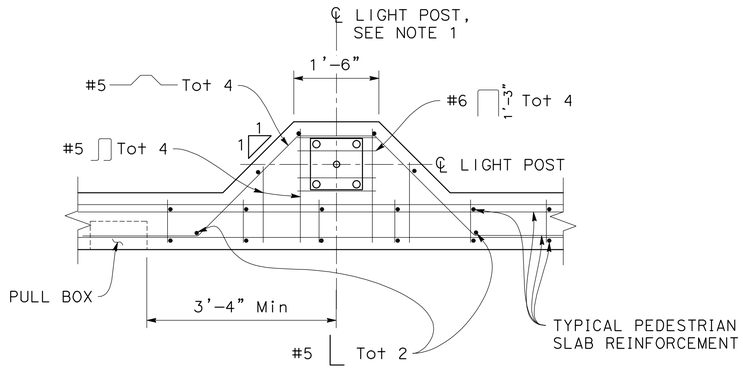

PEDESTAL PLAN VIEW

3/4" = 1'-0"

DRAFT - NOT FOR CONSTRUCTION

DESIGN OVERSIGHT				PREPARED FOR THE STATE OF CALIFORNIA DEPARTMENT OF TRANSPORTATION	M. MOORE PROJECT ENGINEER
SIGN OFF DATE					

	BY	CHECKED
DESIGN	M. MOORE	T. PHAM
DETAILS	J. VALENZUELA	M. MOORE
QUANTITIES	X	X

BRIDGE No.	N/A
POST MILE	N/A

RETAINING WALL No. 106

PEDESTRIAN SLAB DETAILS

STRUCTURES DESIGN DETAIL SHEET (ENGLISH) (REVISION 8/16/2021)

DATE PLOTTED => 4/4/2025 TIME PLOTTED => 11:32 AM
FILE => RW106_05-DT1.dwg USERNAME => ETANAKA

ORIGINAL SCALE IN INCHES FOR REDUCED PLANS 0 1 2 3

PROJECT NUMBER & PHASE: 05200000831 COUNTY/ROUTE: SCR/1 CONTRACT No.: 05-0C734

DISREGARD PRINTS BEARING EARLIER REVISION DATES →

REVISION DATES				SHEET	OF
				5	11

Dist	COUNTY	ROUTE	POST MILES TOTAL PROJECT	SHEET No.	TOTAL SHEETS
5	SCR	1	8.1/10.7	891	931

REGISTERED CIVIL ENGINEER DATE

PLANS APPROVAL DATE

REGISTERED PROFESSIONAL ENGINEER
MARSHALL EUGENE MOORE
No. S6557
Exp. 9-30-25
STRUCTURAL
STATE OF CALIFORNIA

THE STATE OF CALIFORNIA OR ITS OFFICERS OR AGENTS SHALL NOT BE RESPONSIBLE FOR THE ACCURACY OR COMPLETENESS OF SCANNED COPIES OF THIS PLAN SHEET.

SCCRTC
1523 PACIFIC AVE
SANTA CRUZ, CA 95060

MARK THOMAS
701 UNIVERSITY AVE, STE 200
SACRAMENTO, CA 95825

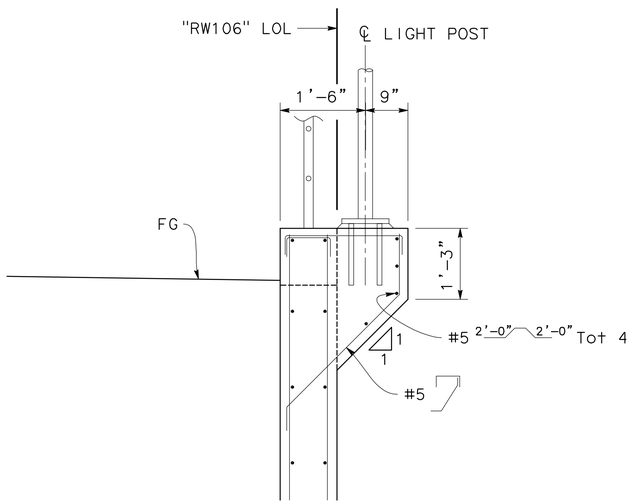

PEDESTRIAN SLAB AT LIGHT POST
3/4" = 1'-0"

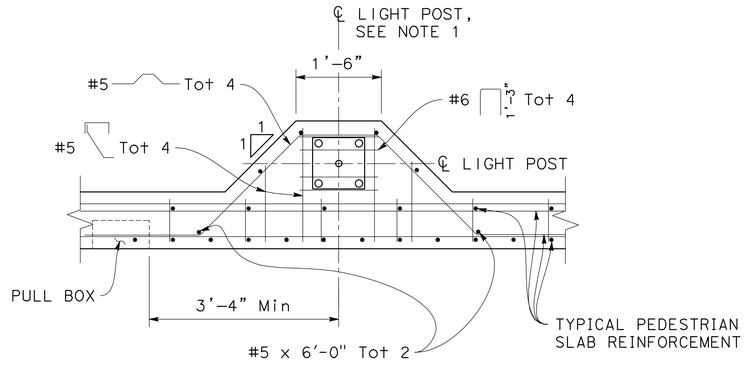

PEDESTAL PLAN VIEW
3/4" = 1'-0"

DRAFT - NOT FOR CONSTRUCTION

DESIGN OVERSIGHT	DESIGN	BY M. MOORE	CHECKED T. PHAM	PREPARED FOR THE STATE OF CALIFORNIA DEPARTMENT OF TRANSPORTATION	M. MOORE PROJECT ENGINEER
SIGN OFF DATE	DETAILS	BY J. VALENZUELA	CHECKED M. MOORE		
	QUANTITIES	BY X	CHECKED X		

BRIDGE No. N/A
POST MILE N/A

RETAINING WALL No. 106

RETAINING WALL TYPE 5 LIGHT POST DETAILS

STRUCTURES DESIGN DETAIL SHEET (ENGLISH) (REVISION 8/16/2021)

DATE PLOTTED => 4/4/2025
FILE => RW106_05-DT2.dwg
TIME PLOTTED => 8:45 AM
USERNAME => ETANAKA
ORIGINAL SCALE IN INCHES FOR REDUCED PLANS 0 1 2 3

PROJECT NUMBER & PHASE: 05200000831
COUNTY/ROUTE: SCR/1
CONTRACT No.: 05-0C734

DISREGARD PRINTS BEARING EARLIER REVISION DATES →

REVISION DATES

SHEET 6 OF 11

Dist	COUNTY	ROUTE	POST MILES TOTAL PROJECT	SHEET No.	TOTAL SHEETS
5	SCR	1	8.1/10.7	892	931

REGISTERED CIVIL ENGINEER DATE

PLANS APPROVAL DATE

REGISTERED PROFESSIONAL ENGINEER — MARSHALL EUGENE MOORE — No. S6557 — Exp. 9-30-25 — STRUCTURAL — STATE OF CALIFORNIA

THE STATE OF CALIFORNIA OR ITS OFFICERS OR AGENTS SHALL NOT BE RESPONSIBLE FOR THE ACCURACY OR COMPLETENESS OF SCANNED COPIES OF THIS PLAN SHEET.

SCCRTC
1523 PACIFIC AVE
SANTA CRUZ, CA 95060

MARK THOMAS
701 UNIVERSITY AVE, STE 200
SACRAMENTO, CA 95825

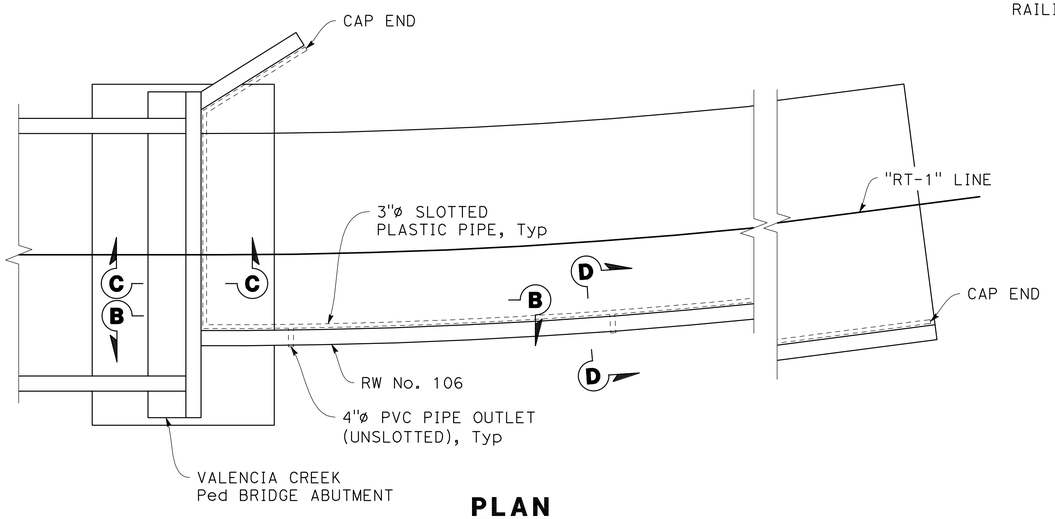

PLAN
1" = 5'

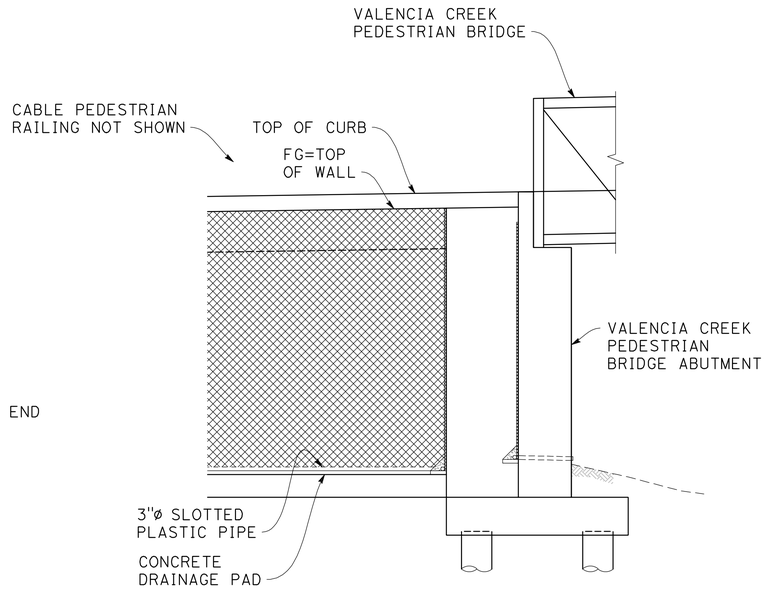

SECTION B-B
1" = 5'

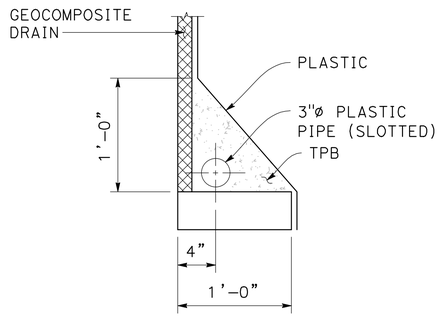

SECTION C-C
NO SCALE

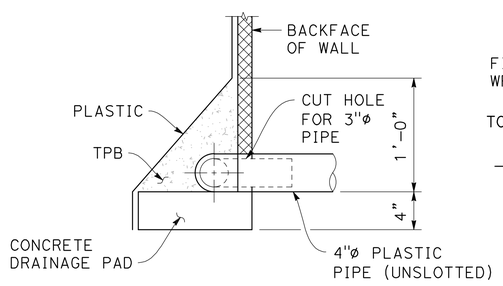

SECTION D-D
NO SCALE

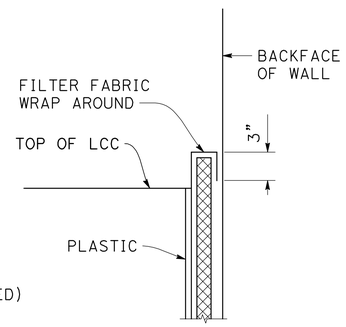

DETAIL 1
NO SCALE

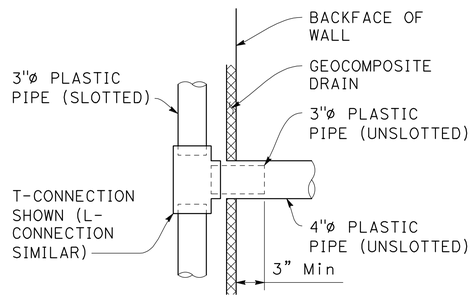

T-CONNECTION
NO SCALE

DRAFT - NOT FOR CONSTRUCTION

DESIGN OVERSIGHT

SIGN OFF DATE

	BY	CHECKED
DESIGN	M. MOORE	T. PHAM
DETAILS	J. VALENZUELA	M. MOORE
QUANTITIES	X	X

PREPARED FOR THE STATE OF CALIFORNIA DEPARTMENT OF TRANSPORTATION

M. MOORE
PROJECT ENGINEER

BRIDGE No. N/A
POST MILE N/A

RETAINING WALL No. 106
DRAINAGE DETAILS

STRUCTURES DESIGN DETAIL SHEET (ENGLISH) (REVISION 8/16/2021)

DATE PLOTTED => 4/4/2025
FILE => RW106_07-DT3.dwg

TIME PLOTTED => 8:58 AM
USERNAME => ETANAKA

ORIGINAL SCALE IN INCHES FOR REDUCED PLANS 0 1 2 3

PROJECT NUMBER & PHASE: 05200000831

COUNTY/ROUTE: SCR/1
CONTRACT No.: 05-0C734

DISREGARD PRINTS BEARING EARLIER REVISION DATES →

REVISION DATES					SHEET	OF
					7	11

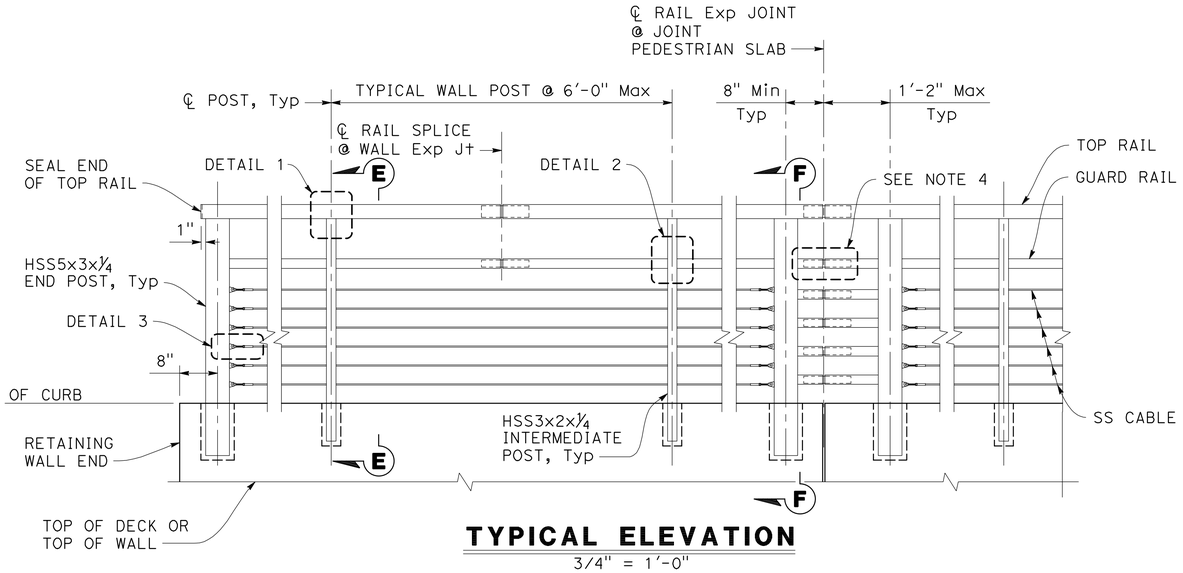

TYPICAL ELEVATION

3/4" = 1'-0"

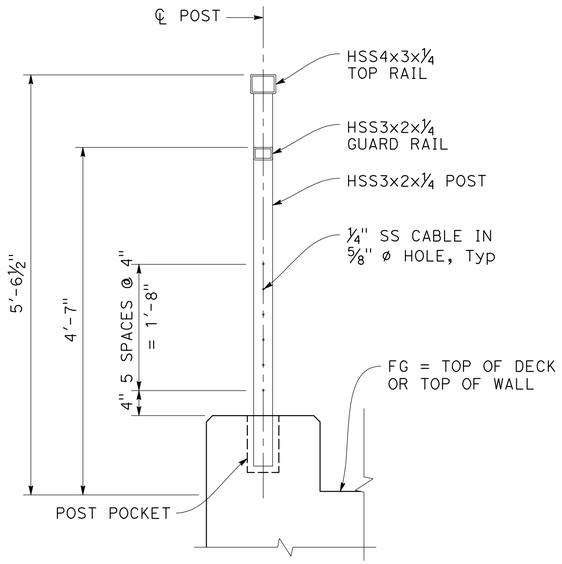

SECTION E-E

1" = 1'-0"

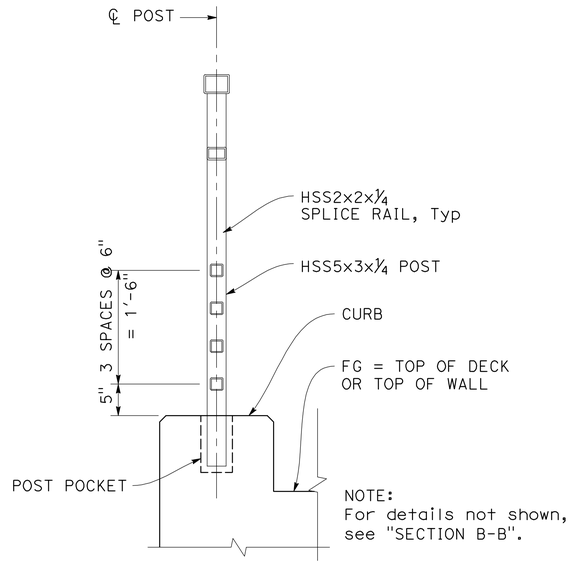

SECTION F-F

1" = 1'-0"

DRAFT - NOT FOR CONSTRUCTION

Dist	COUNTY	ROUTE	POST MILES TOTAL PROJECT	SHEET No.	TOTAL SHEETS
5	SCR	1	8.1/10.7	893	931

REGISTERED CIVIL ENGINEER DATE

PLANS APPROVAL DATE

REGISTERED PROFESSIONAL ENGINEER — MARSHALL EUGENE MOORE — No. S6557 — Exp. 9-30-25 — STRUCTURAL — STATE OF CALIFORNIA

THE STATE OF CALIFORNIA OR ITS OFFICERS OR AGENTS SHALL NOT BE RESPONSIBLE FOR THE ACCURACY OR COMPLETENESS OF SCANNED COPIES OF THIS PLAN SHEET.

SCCRTC
1523 PACIFIC AVE
SANTA CRUZ, CA 95060

MARK THOMAS
701 UNIVERSITY AVE, STE 200
SACRAMENTO, CA 95825

NOTES:

1. All components of the cable pedestrian railings must be hot dipped galvanized and finished with Natina stain.
2. All HSS members to comply with ASTM A500/A500m, Grade B. All other steel to comply with ASTM A36/A36M.
3. Orient tube seams to be on outside face of railing (i.e. not facing trail).
4. For cable pedestrian railing details and turnbuckle details, see "CABLE PEDESTRIAN RAILING (TYPE 2) DETAILS No. 2" sheet.

DESIGN OVERSIGHT

SIGN OFF DATE

	BY	CHECKED
DESIGN	M. MOORE	M. KLEYMANN
DETAILS	J. VALENZUELA	M. MOORE
QUANTITIES	X	X

PREPARED FOR THE STATE OF CALIFORNIA DEPARTMENT OF TRANSPORTATION

M. MOORE
PROJECT ENGINEER

BRIDGE No. N/A
POST MILE N/A

RETAINING WALL No. 106

CABLE PEDESTRIAN RAILING (TYPE 2) DETAILS No. 1

STRUCTURES DESIGN DETAIL SHEET (ENGLISH) (REVISION 8/16/2021)

DATE PLOTTED => 4/4/2025
FILE => RW106_08_CRDT1.dwg

TIME PLOTTED => 9:01 AM
USERNAME => JVALENZUELA

ORIGINAL SCALE IN INCHES FOR REDUCED PLANS 0 1 2 3

PROJECT NUMBER & PHASE: 05200000831

COUNTY/ROUTE: SCR/1
CONTRACT No.: 05-0C734

DISREGARD PRINTS BEARING EARLIER REVISION DATES →

REVISION DATES					SHEET	OF
					7	11

Dist	COUNTY	ROUTE	POST MILES TOTAL PROJECT	SHEET No.	TOTAL SHEETS
5	SCR	1	8.1/10.7	894	931

REGISTERED CIVIL ENGINEER DATE

PLANS APPROVAL DATE

REGISTERED PROFESSIONAL ENGINEER — MARSHALL EUGENE MOORE — No. S6557 — Exp. 9-30-25 STRUCTURAL — STATE OF CALIFORNIA

THE STATE OF CALIFORNIA OR ITS OFFICERS OR AGENTS SHALL NOT BE RESPONSIBLE FOR THE ACCURACY OR COMPLETENESS OF SCANNED COPIES OF THIS PLAN SHEET.

SCCRTC
1523 PACIFIC AVE
SANTA CRUZ, CA 95060

MARK THOMAS
701 UNIVERSITY AVE, STE 200
SACRAMENTO, CA 95825

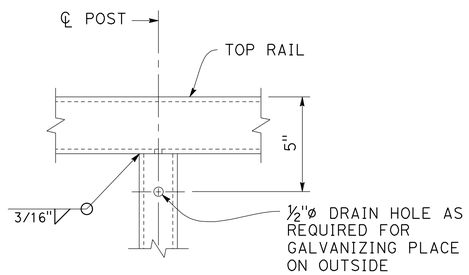

DETAIL 1
3" = 1'-0"

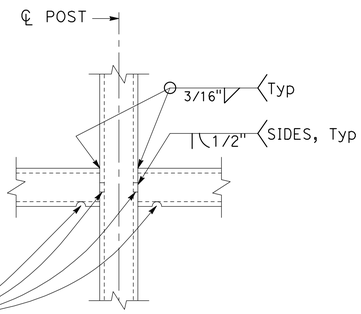

DETAIL 2
3" = 1'-0"

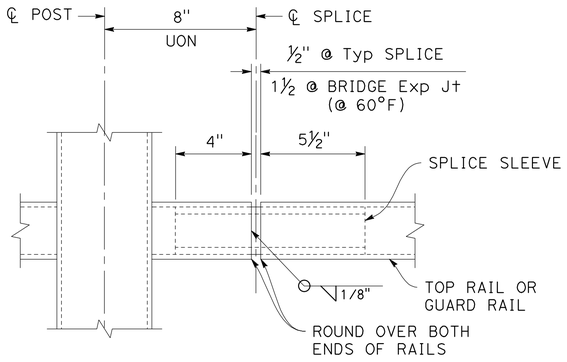

TYPICAL RAIL SPLICE DETAIL
3" = 1'-0"

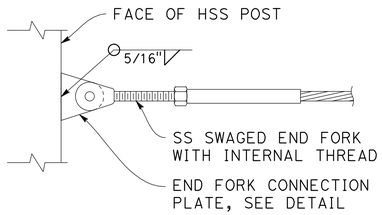

DETAIL 3
NO SCALE

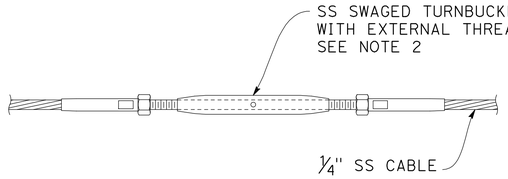

TYPICAL TURNBUCKLE DETAIL
NO SCALE

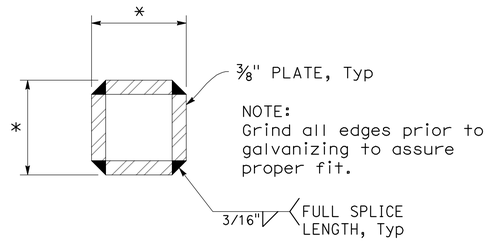

* The difference between the out-to-out rail splice sleeve dimensions and the clear inside dimensions of the tubular steel rail elements must not exceed 3/16" after galvanizing

SPLICE SLEEVE
NO SCALE

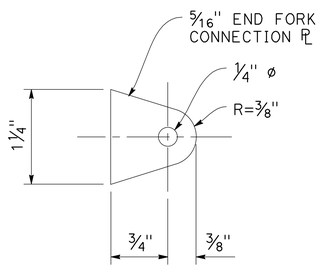

END FORK CONNECTION PLATE DETAIL
NO SCALE

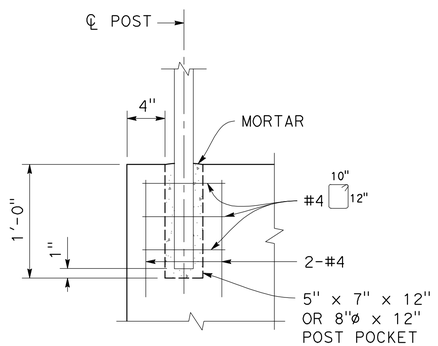

END POST POCKET DETAIL
NO SCALE

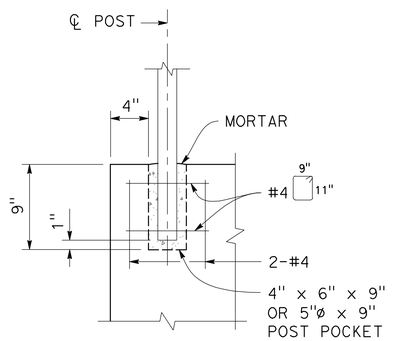

INTERMEDIATE POST POCKET DETAIL
NO SCALE

NOTES:

1. For typical pedestrian bridge railing notes and for location of details, see "CABLE PEDESTRIAN RAILING (TYPE 2) DETAILS No. 1" sheet.
2. Cables must be spliced with turnbuckles spaced no more than 200 ft and not less than 50ft. turnbuckle must have minimum 1½" of adjustment and a minimum breaking load of 3500 lbs.
3. Submit cable product and fittings to engineer for review and approval. End fork connection plate dimensions to be adjusted to suit selected end fork product. Provide final dimensions when submitting fitting details.

DRAFT - NOT FOR CONSTRUCTION

DESIGN OVERSIGHT

SIGN OFF DATE

	BY	CHECKED
DESIGN	M. MOORE	M. KLEYMANN
DETAILS	J. VALENZUELA	M. MOORE
QUANTITIES	X	X

PREPARED FOR THE STATE OF CALIFORNIA DEPARTMENT OF TRANSPORTATION

M. MOORE
PROJECT ENGINEER

BRIDGE No.	N/A
POST MILE	N/A

RETAINING WALL No. 106

CABLE PEDESTRIAN RAILING (TYPE 2) DETAILS No. 2

STRUCTURES DESIGN DETAIL SHEET (ENGLISH) (REVISION 8/16/2021)

DATE PLOTTED => 4/4/2025
FILE => RW106_09_CRDT2.dwg

TIME PLOTTED => 9:05 AM
USERNAME => JVALENZUELA

ORIGINAL SCALE IN INCHES FOR REDUCED PLANS 0 1 2 3

PROJECT NUMBER & PHASE: 05200000831

COUNTY/ROUTE: SCR/1
CONTRACT No.: 05-0C734

DISREGARD PRINTS BEARING EARLIER REVISION DATES

REVISION DATES				SHEET	OF
				8	11

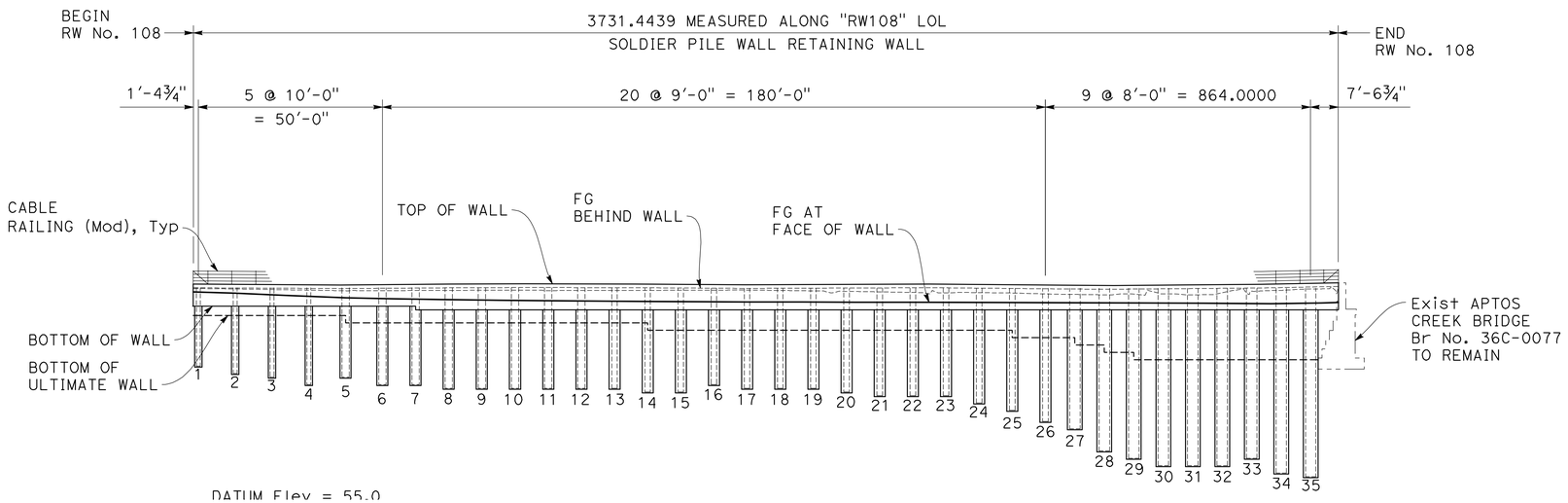

DEVELOPED MIRRORED ELEVATION

1' = 20'

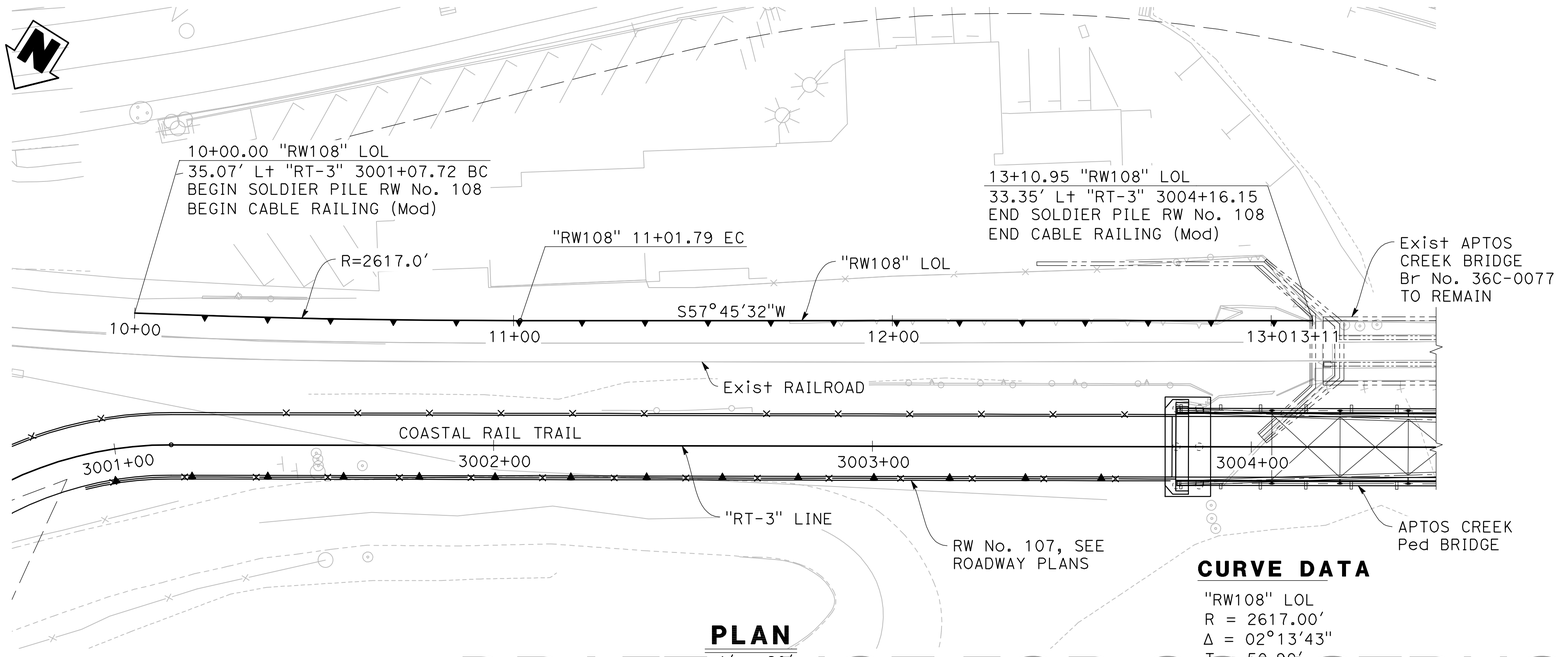

PLAN

1' = 20'

CURVE DATA

"RW108" LOL
R = 2617.00'
Δ = 02°13'43"
T = 50.90'
L = 101.79'

DRAFT - NOT FOR CONSTRUCTION

Dist	COUNTY	ROUTE	POST MILES TOTAL PROJECT	SHEET No.	TOTAL SHEETS
5	SCR	1	8.1/10.7	####	#####

REGISTERED CIVIL ENGINEER DATE

PLANS APPROVAL DATE

REGISTERED PROFESSIONAL ENGINEER
JON ROBERT SAMPSON
No. 4344
Exp 03/31/25
STRUCTURAL
STATE OF CALIFORNIA

THE STATE OF CALIFORNIA OR ITS OFFICERS OR AGENTS SHALL NOT BE RESPONSIBLE FOR THE ACCURACY OR COMPLETENESS OF SCANNED COPIES OF THIS PLAN SHEET.

SCCRTC
1523 PACIFIC AVE
SANTA CRUZ, CA 95060

MARK THOMAS
701 UNIVERSITY AVE, STE 200
SACRAMENTO, CA 95825

INDEX TO PLAN

SHEET No.	TITLE
1	GENERAL PLAN
2	GENERAL NOTES
3	SOLDIER PILE WALL LAYOUT No. 1
4	SOLDIER PILE WALL LAYOUT No. 2
5	SOLDIER PILE WALL DETAILS
6	LOG OF TEST BORING 1 OF 2
7	LOG OF TEST BORING 2 OF 2

QUANTITIES

STRUCTURE EXCAVATION (SOLDIER PILE WALL)	35	CY
STRUCTURE BACKFILL (SOLDIER PILE WALL)	5	CY
CONCRETE BACKFILL (SOLDIER PILE WALL)	227	CY
LEAN CONCRETE BACKFILL	154	CY
STEEL SOLDIER PILE WALL (W12x87)	23	LF
STEEL SOLDIER PILE WALL (W12x120)	50	LF
STEEL SOLDIER PILE WALL (W12x136)	28	LF
STEEL SOLDIER PILE WALL (W14x159)	223	LF
STEEL SOLDIER PILE WALL (W14x176)	229	LF
STEEL SOLDIER PILE WALL (W18x158)	91	LF
STEEL SOLDIER PILE WALL (W24x207)	104	LF
STEEL SOLDIER PILE WALL (W36x247)	131	LF
STEEL SOLDIER PILE WALL (W36x302)	247	LF
STEEL SOLDIER PILE WALL (W36x330)	53	LF
24" DRILLED HOLE	100	LF
36" DRILLED HOLE	648	LF
48" DRILLED HOLE	431	LF
TIMBER LAGGING	14	MFBM
DRILL AND BOND DOWN	5	LF
MISCELLANEOUS METAL (RETAINING WALL)	46	LB
CABLE RAILING (Mod)	311	LF

DESIGN OVERSIGHT	DESIGN	BY J. SAMPSON	CHECKED T. FAIR/M. MOORE	SEISMIC ANALYSIS	BY X	CHECKED X	PREPARED FOR THE STATE OF CALIFORNIA DEPARTMENT OF TRANSPORTATION
	DETAILS	BY J. VALENZUELA	CHECKED T. FAIR/M. MOORE	LAYOUT	BY M. MOORE	CHECKED J. SAMPSON	
SIGN OFF DATE	QUANTITIES	BY X	CHECKED X	SPECIFICATIONS	BY M. MOORE	PLANS AND SPECS COMPARED J. HICKEY	

M. MOORE
PROJECT ENGINEER

BRIDGE No.	RETAINING WALL No. 108
N/A	
POST MILE	GENERAL PLAN
N/A	

STRUCTURES DESIGN GENERAL PLAN SHEET (ENGLISH) (REVISION 2/8/2022)

DATE PLOTTED => 8/30/2024
FILE => RW108_01_GP.dwg
TIME PLOTTED => 12:09 PM
USERNAME => JVALENZUELA

ORIGINAL SCALE IN INCHES FOR REDUCED PLANS 0 1 2 3

PROJECT NUMBER & PHASE: 05200000831
COUNTY/ROUTE: SCR/1
CONTRACT No.: 05-0C734

DISREGARD PRINTS BEARING EARLIER REVISION DATES

REVISION DATES				SHEET	OF
				1	7

Dist	COUNTY	ROUTE	POST MILES TOTAL PROJECT	SHEET No.	TOTAL SHEETS
5	SCR	1	8.1/10.7	#####	#####

REGISTERED CIVIL ENGINEER DATE

PLANS APPROVAL DATE

REGISTERED PROFESSIONAL ENGINEER — MARSHALL EUGENE MOORE — No. S6557 — Exp. 9-30-25 — STRUCTURAL — STATE OF CALIFORNIA

THE STATE OF CALIFORNIA OR ITS OFFICERS OR AGENTS SHALL NOT BE RESPONSIBLE FOR THE ACCURACY OR COMPLETENESS OF SCANNED COPIES OF THIS PLAN SHEET.

SCCRTC
1523 PACIFIC AVE
SANTA CRUZ, CA 95060

MARK THOMAS
701 UNIVERSITY AVE, STE 200
SACRAMENTO, CA 95825

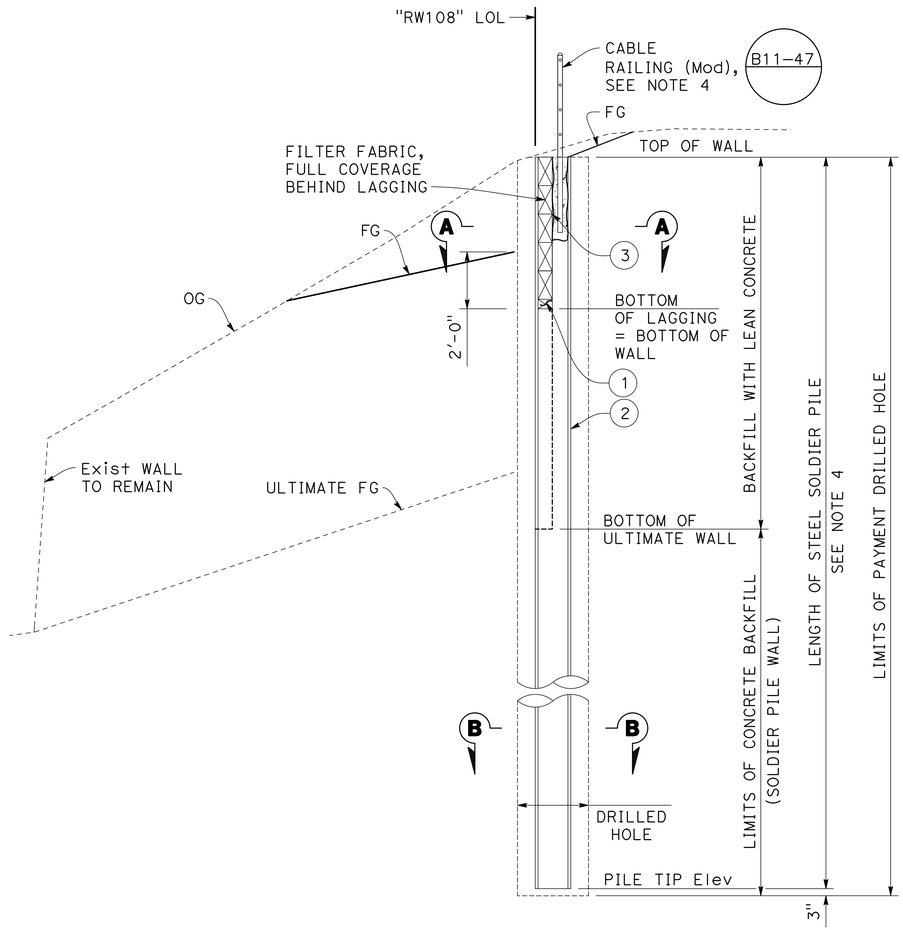

TYPICAL SECTION

3/8" = 1'-0"

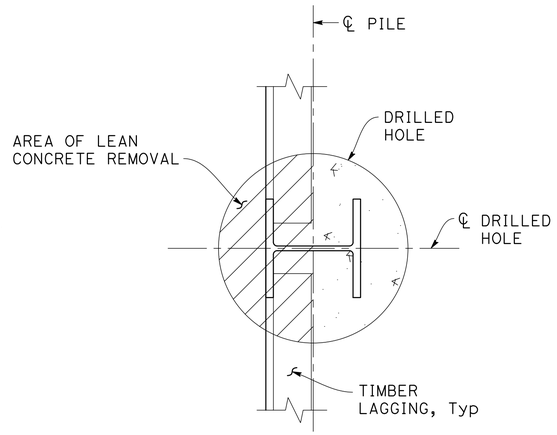

SECTION A-A

NO SCALE

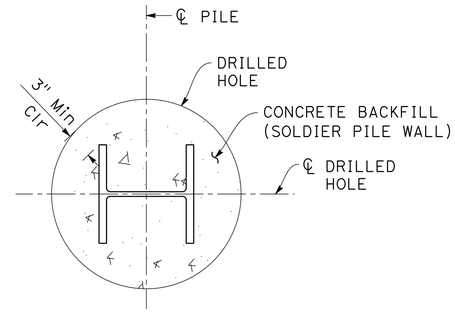

SECTION B-B

NO SCALE

GENERAL NOTES

DESIGN: AASHTO LRFD Bridge Design Specifications, 8th Edition with California Amendments, Preface Dated April 2019.

Standard Plans and Specifications, 2023 edition with Revised Standard Plans, dated January 2024.

Structural Technical Policies as of February 2023.

LIVE LOAD: AREMA Cooper E-80

SOIL PARAMETERS: Soil Weight = 125 pcf
Active Pressure coefficent, Ka = 0.36
Passive pressure coefficient, Kp = 3.60

SEISMIC PARAMETERS: K_h = 0.36
ΔK_{ae} = 0.14
K_{pe} = 3.80

STEEL SOLDIER PILES: $F_y$min = 50 ksi

STRUCTURAL TIMBER: Preservative-Treated Douglas Fir, Grade No. 1 or better. Timber to be full sawn.

NOTES:

(1) Treated Timber Lagging (6"x12")

(2) Steel Pile

(3) Filter Fabric (FULL HEIGHT BEHIND LAGGING)

4. All posts, braces, cables, hardware and steel soldier piles to be galvanized and natina stained. See Project Specifications for more information.

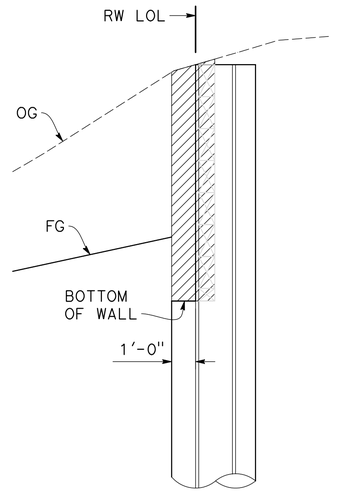

LIMITS OF PAYMENT FOR STRUCTURE EXCAVATION

NO SCALE

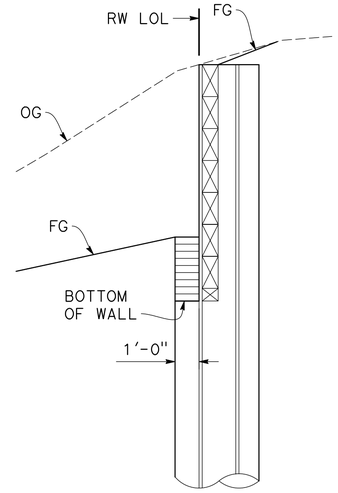

LIMITS OF PAYMENT FOR STRUCTURE BACKFILL

NO SCALE

Structure Excavation Soldier Pile Wall

Structure Backfill Soldier Pile Wall

DRAFT - NOT FOR CONSTRUCTION

X DESIGN OVERSIGHT	DESIGN	BY M. MOORE	CHECKED T. FAIR/M. MOORE	PREPARED FOR THE STATE OF CALIFORNIA DEPARTMENT OF TRANSPORTATION	M. MOORE PROJECT ENGINEER
X SIGN OFF DATE	DETAILS	BY J. VALENZUELA	CHECKED T. FAIR/M. MOORE		BRIDGE No. N/A
	QUANTITIES	BY X	CHECKED X		POST MILE N/A

RETAINING WALL No. 108

GENERAL NOTES

STRUCTURES DESIGN DETAIL SHEET (ENGLISH) (REVISION 8/16/2021)

DATE PLOTTED => 8/30/2024 TIME PLOTTED => 10:15 AM
FILE => RW108_02_GN.dwg USERNAME => JVALENZUELA

ORIGINAL SCALE IN INCHES FOR REDUCED PLANS 0 1 2 3

PROJECT NUMBER & PHASE: 05200000831 COUNTY/ROUTE: SCR/1 CONTRACT No.: 05-0C734

DISREGARD PRINTS BEARING EARLIER REVISION DATES →

REVISION DATES				SHEET	OF
				2	7

Dist	COUNTY	ROUTE	POST MILES TOTAL PROJECT	SHEET No.	TOTAL SHEETS
5	SCR	1	8.1/10.7	#####	#####

REGISTERED CIVIL ENGINEER DATE

PLANS APPROVAL DATE

REGISTERED PROFESSIONAL ENGINEER — MARSHALL EUGENE MOORE — No. S6557 — Exp. 9-30-25 — STRUCTURAL — STATE OF CALIFORNIA

THE STATE OF CALIFORNIA OR ITS OFFICERS OR AGENTS SHALL NOT BE RESPONSIBLE FOR THE ACCURACY OR COMPLETENESS OF SCANNED COPIES OF THIS PLAN SHEET.

SCCRTC
1523 PACIFIC AVE
SANTA CRUZ, CA 95060

MARK THOMAS
701 UNIVERSITY AVE, STE 200
SACRAMENTO, CA 95825

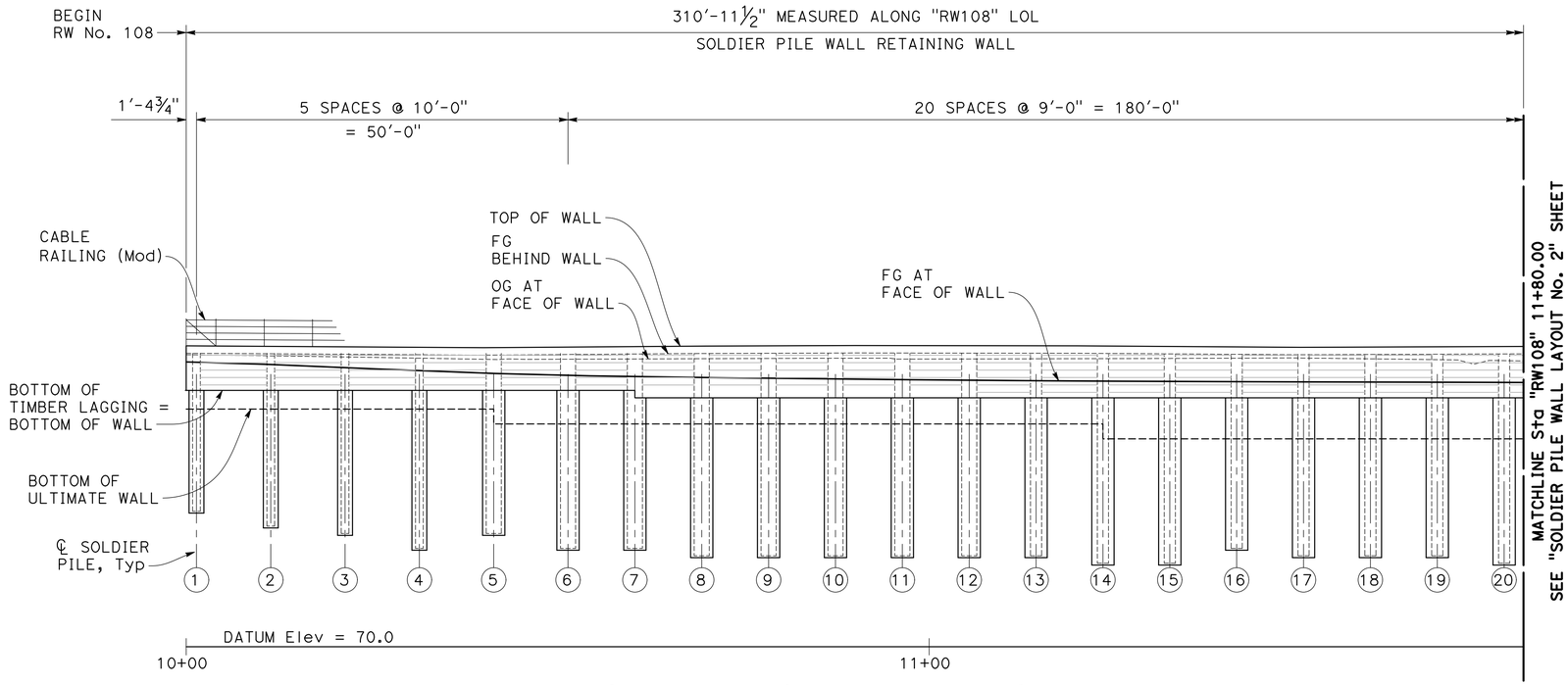

DEVELOPED MIRRORED ELEVATION

1' = 10'

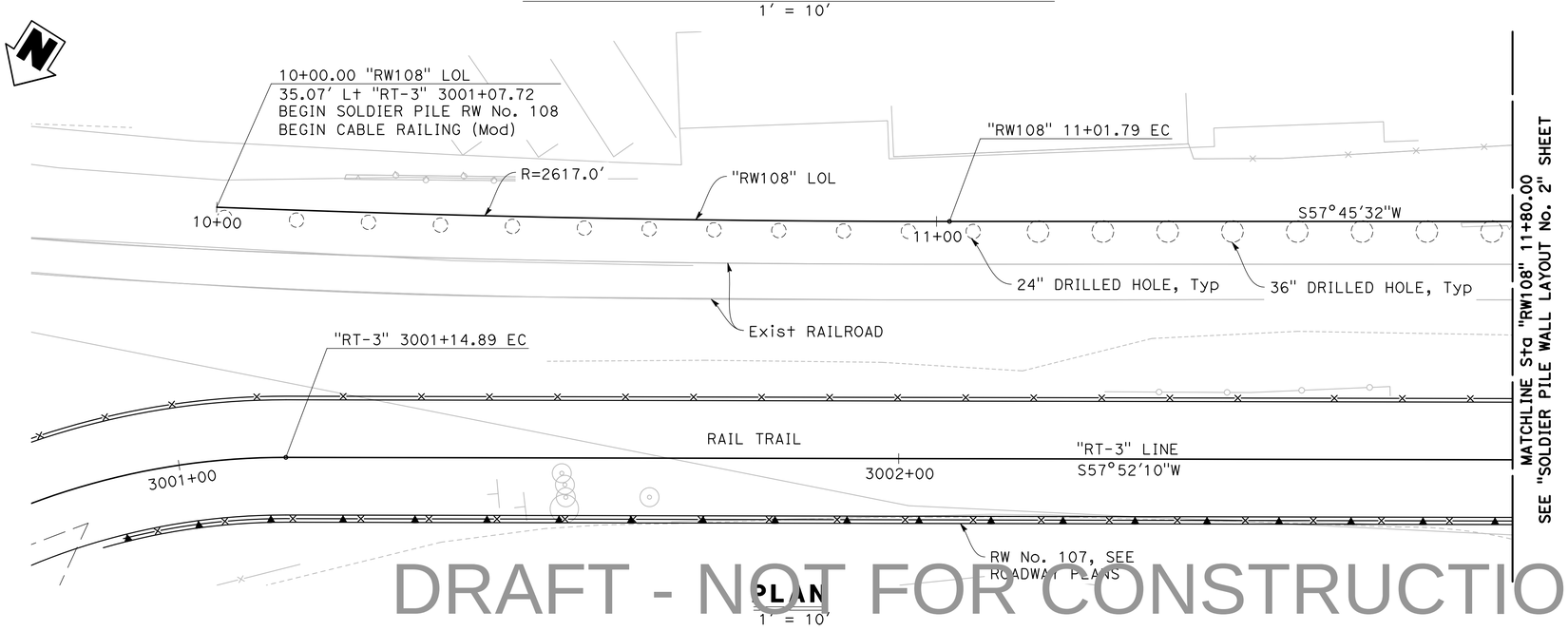

PLAN

1' = 10'

LEGEND:

- 24"ø DRILLED HOLE
- 36"ø DRILLED HOLE

CURVE DATA

"RW108" LOL
R = 2617.00'
Δ = 02°13'43"
T = 50.90'
L = 101.79'

DRAFT - NOT FOR CONSTRUCTION

X DESIGN OVERSIGHT X SIGN OFF DATE		DESIGN	BY M. MOORE	CHECKED T. FAIR/M. MOORE	PREPARED FOR THE STATE OF CALIFORNIA DEPARTMENT OF TRANSPORTATION
		DETAILS	BY J. VALENZUELA	CHECKED T. FAIR/M. MOORE	
		QUANTITIES	BY X	CHECKED X	

M. MOORE
PROJECT ENGINEER

BRIDGE No. N/A
POST MILE N/A

RETAINING WALL No. 108

SOLDIER PILE WALL LAYOUT No. 1

STRUCTURES DESIGN DETAIL SHEET (ENGLISH) (REVISION 8/16/2021)

DATE PLOTTED => 8/30/2024
FILE => RW108_03_SP1.dwg

TIME PLOTTED => 10:16 AM
USERNAME => JVALENZUELA

ORIGINAL SCALE IN INCHES FOR REDUCED PLANS 0 1 2 3

PROJECT NUMBER & PHASE: 05200000831

COUNTY/ROUTE: SCR/1
CONTRACT No.: 05-0C734

DISREGARD PRINTS BEARING EARLIER REVISION DATES

REVISION DATES				SHEET	OF
				3	7

Dist	COUNTY	ROUTE	POST MILES TOTAL PROJECT	SHEET No.	TOTAL SHEETS
5	SCR	1	8.1/10.7	#####	#####

REGISTERED CIVIL ENGINEER DATE

PLANS APPROVAL DATE

REGISTERED PROFESSIONAL ENGINEER — MARSHALL EUGENE MOORE — No. S6557 — Exp. 9-30-25 — STRUCTURAL — STATE OF CALIFORNIA

THE STATE OF CALIFORNIA OR ITS OFFICERS OR AGENTS SHALL NOT BE RESPONSIBLE FOR THE ACCURACY OR COMPLETENESS OF SCANNED COPIES OF THIS PLAN SHEET.

SCCRTC
1523 PACIFIC AVE
SANTA CRUZ, CA 95060

MARK THOMAS
701 UNIVERSITY AVE, STE 200
SACRAMENTO, CA 95825

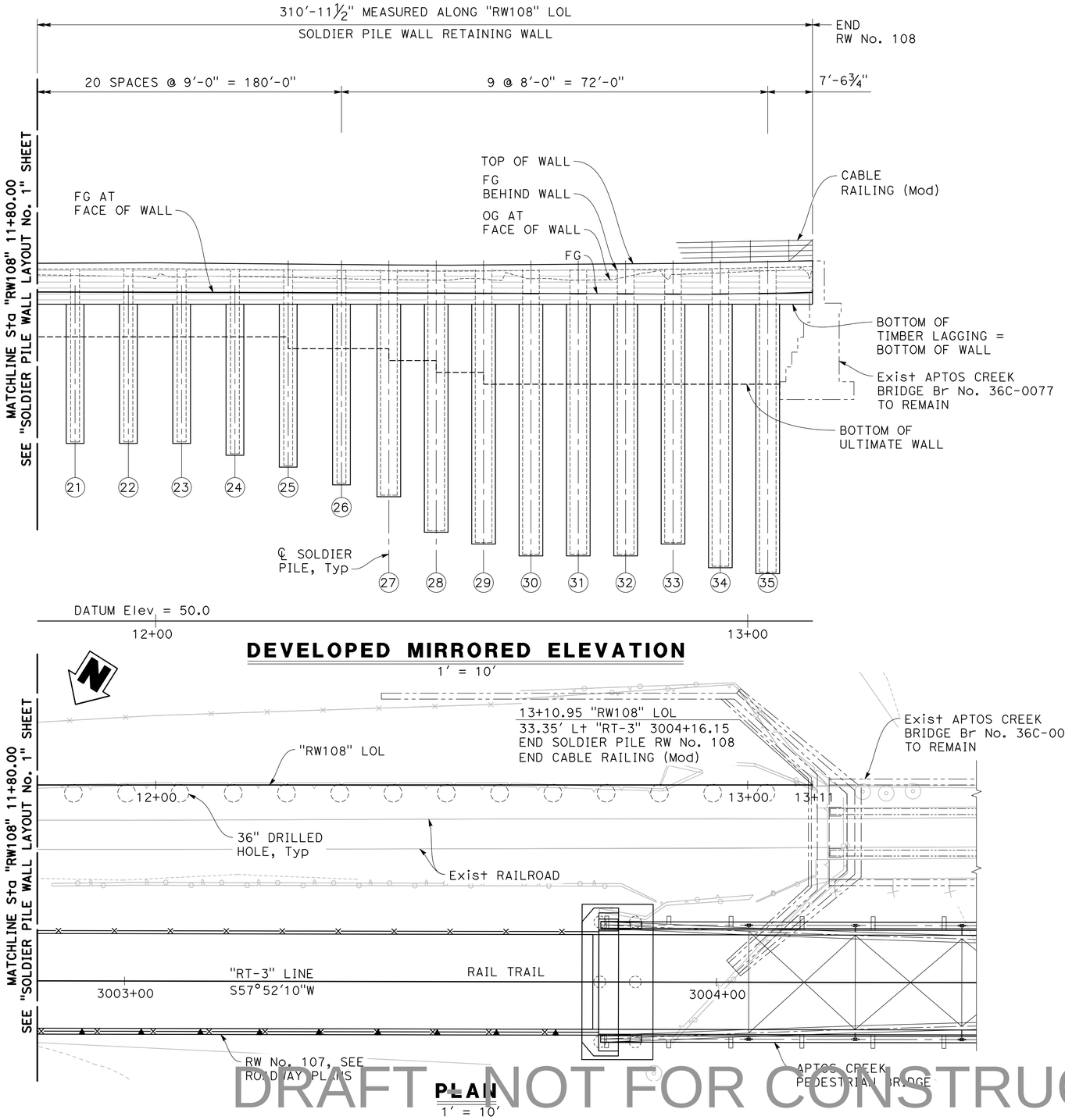

DEVELOPED MIRRORED ELEVATION

1' = 10'

LEGEND:

◌ 36"ø DRILLED HOLE

PLAN

1' = 10'

DRAFT NOT FOR CONSTRUCTION

X DESIGN OVERSIGHT X SIGN OFF DATE			
DESIGN	BY M. MOORE	CHECKED T. FAIR/M. MOORE	
DETAILS	BY J. VALENZUELA	CHECKED T. FAIR/M. MOORE	
QUANTITIES	BY X	CHECKED X	

PREPARED FOR THE STATE OF CALIFORNIA DEPARTMENT OF TRANSPORTATION

M. MOORE
PROJECT ENGINEER

BRIDGE No.	
N/A	
POST MILE	
N/A	

RETAINING WALL No. 108

SOLDIER PILE WALL LAYOUT No. 2

STRUCTURES DESIGN DETAIL SHEET (ENGLISH) (REVISION 8/16/2021)

DATE PLOTTED => 8/30/2024 TIME PLOTTED =>10:16 AM
FILE =>RW108_04_SP2.dwg USERNAME => JVALENZUELA

ORIGINAL SCALE IN INCHES FOR REDUCED PLANS 0 1 2 3

PROJECT NUMBER & PHASE: 05200000831 COUNTY/ROUTE: SCR/1 CONTRACT No.: 05-0C734

DISREGARD PRINTS BEARING EARLIER REVISION DATES →

REVISION DATES					SHEET	OF
					4	7

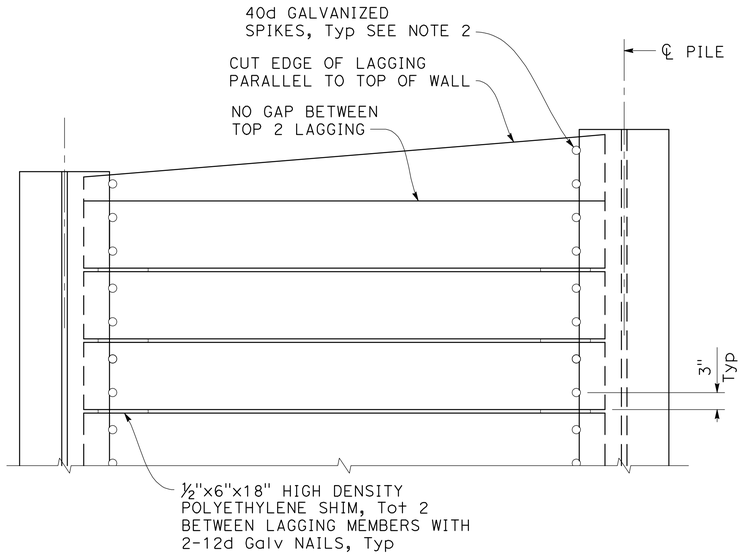

PART ELEVATION - TIMBER LAGGING

NO SCALE

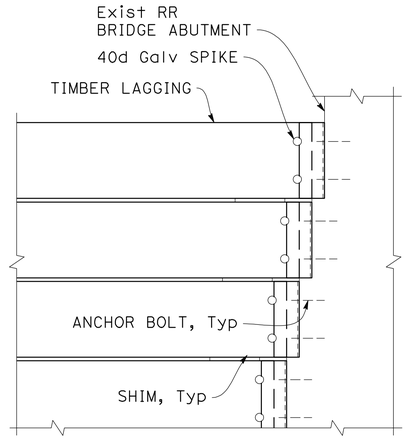

ELEVATION

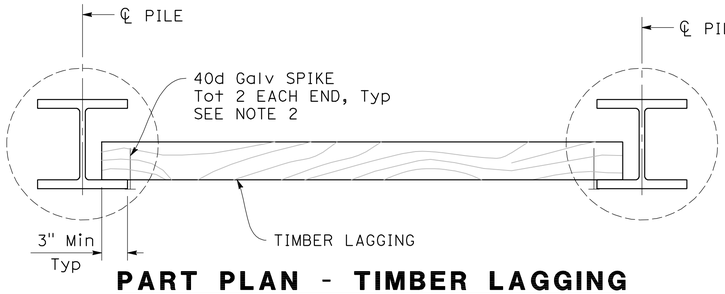

PART PLAN - TIMBER LAGGING

NO SCALE

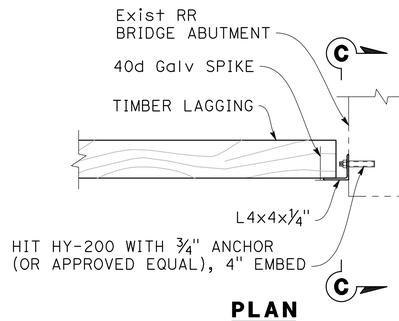

PLAN

END CONNECTION TO EXISTING ABUTMENT

NO SCALE

NOTES:

1. No clipping of timber lagging corners allowed. Lagging corners may be chamfered to facilitate placement. Max two corners per lagging.
2. Spikes must not be bent.

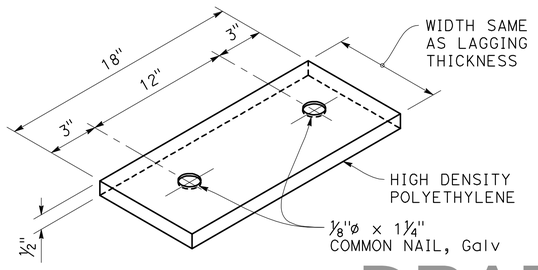

SHIM DETAIL

NO SCALE

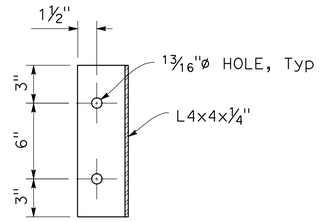

SECTION C-C

NO SCALE

PILE DATA TABLE

PILE NUMBER	STATION	PILE SECTION	DRILLED HOLE (in)	PILE TIP ELEVATION (ft)	TOP OF WALL ELEVATION (ft)	BOTTOM OF LAGGING ELEVATION (ft)	ULTIMATE BOTTOM OF LAGGING (ft)
1	10+01.39	W12x87	24.00	88.00	110.52	104.50	102.00
2	10+11.39	W12x120	24.00	86.00	110.52	104.50	102.00
3	10+21.39	W12x120	24.00	85.00	110.51	104.50	102.00
4	10+31.39	W12x136	24.00	83.00	110.51	104.50	102.00
5	10+41.39	W14x159	36.00	85.00	110.50	104.50	100.00
6	10+51.39	W14x159	36.00	83.00	110.50	104.50	100.00
7	10+60.39	W14x159	36.00	83.00	110.49	103.50	100.00
8	10+69.39	W14x159	36.00	82.00	110.49	103.50	100.00
9	10+78.39	W14x159	36.00	82.00	110.52	103.50	100.00
10	10+87.39	W14x159	36.00	82.00	110.55	103.50	100.00
11	10+96.39	W14x159	36.00	82.00	110.55	103.50	100.00
12	11+05.39	W14x159	36.00	82.00	110.54	103.50	100.00
13	11+14.39	W14x176	36.00	82.00	110.53	103.50	100.00
14	11+23.39	W14x176	36.00	81.00	110.50	103.50	98.00
15	11+32.39	W14x176	36.00	81.00	110.44	103.50	98.00
16	11+41.39	W14x176	36.00	83.00	110.38	103.50	98.00
17	11+50.39	W14x176	36.00	82.00	110.32	103.50	98.00
18	11+59.39	W14x176	36.00	82.00	110.36	103.50	98.00
19	11+68.39	W14x176	36.00	82.00	110.39	103.50	98.00
20	11+77.39	W14x176	36.00	81.00	110.43	103.50	98.00
21	11+86.39	W18x158	36.00	80.00	110.47	103.50	98.00
22	11+95.39	W18x158	36.00	80.00	110.50	103.50	98.00
23	12+04.39	W18x158	36.00	80.00	110.48	103.50	98.00
24	12+13.39	W24x207	36.00	78.00	110.40	103.50	98.00
25	12+22.39	W24x207	36.00	76.00	110.31	103.50	96.00
26	12+31.39	W24x207	36.00	73.00	110.23	103.50	96.00
27	12+39.39	W36x247	48.00	71.00	110.16	103.50	94.00
28	12+47.39	W36x247	48.00	65.00	110.12	103.50	92.00
29	12+55.39	W36x247	48.00	63.00	110.15	103.50	90.00
30	12+63.39	W36x302	48.00	61.00	110.22	103.50	90.00
31	12+71.39	W36x302	48.00	61.00	110.29	103.50	90.00
32	12+79.39	W36x302	48.00	61.00	110.35	103.50	90.00
33	12+87.39	W36x302	48.00	63.00	110.42	103.50	90.00
34	12+95.39	W36x302	48.00	59.00	110.55	103.50	90.00
35	13+03.39	W36x330	48.00	58.00	110.71	103.50	90.00

Dist	COUNTY	ROUTE	POST MILES TOTAL PROJECT	SHEET No.	TOTAL SHEETS
5	SCR	1	8.1/10.7	####	#####

REGISTERED CIVIL ENGINEER DATE

REGISTERED PROFESSIONAL ENGINEER — MARSHALL EUGENE MOORE — No. S6557 — Exp. 9-30-25 — STRUCTURAL — STATE OF CALIFORNIA

PLANS APPROVAL DATE

THE STATE OF CALIFORNIA OR ITS OFFICERS OR AGENTS SHALL NOT BE RESPONSIBLE FOR THE ACCURACY OR COMPLETENESS OF SCANNED COPIES OF THIS PLAN SHEET.

SCCRTC
1523 PACIFIC AVE
SANTA CRUZ, CA 95060

MARK THOMAS
701 UNIVERSITY AVE, STE 200
SACRAMENTO, CA 95825

DRAFT - NOT FOR CONSTRUCTION

X
DESIGN OVERSIGHT
X
SIGN OFF DATE

	BY	CHECKED
DESIGN	M. MOORE	T. FAIR/M. MOORE
DETAILS	J. VALENZUELA	T. FAIR/M. MOORE
QUANTITIES	X	X

PREPARED FOR THE STATE OF CALIFORNIA DEPARTMENT OF TRANSPORTATION

M. MOORE
PROJECT ENGINEER

BRIDGE No. N/A
POST MILE N/A

RETAINING WALL No. 108

SOLDIER PILE WALL DETAILS

STRUCTURES DESIGN DETAIL SHEET (ENGLISH) (REVISION 8/16/2021)

DATE PLOTTED => 8/30/2024
FILE =>RW108_05_DT.dwg
TIME PLOTTED =>12:10 PM
USERNAME => JVALENZUELA
ORIGINAL SCALE IN INCHES FOR REDUCED PLANS 0 1 2 3

PROJECT NUMBER & PHASE: 05200000831
COUNTY/ROUTE: SCR/1
CONTRACT No.: 05-0C734

DISREGARD PRINTS BEARING EARLIER REVISION DATES

REVISION DATES	SHEET	OF
	5	7

DIST	COUNTY	ROUTE	POST MILES TOTAL PROJECT	SHEET No	TOTAL SHEETS
05	SCR	1	8.1/10.7		

GEOTECHNICAL PROFESSIONAL DATE

PLANS APPROVAL DATE

REGISTERED PROFESSIONAL ENGINEER No. EXP. GEOTECHNICAL STATE OF CALIFORNIA

The State of California or its officers or agents shall not be responsible for the accuracy or completeness of scanned copies of this plan sheet.

MARK THOMS
701 UNIVERSITY AVE, STE 200
SACRAMENTO, CA 95825

PARIKH CONSULTANTS, INC.
1497 N MILPITAS BLVD.
MILPITAS, CA 95035

DRAFT

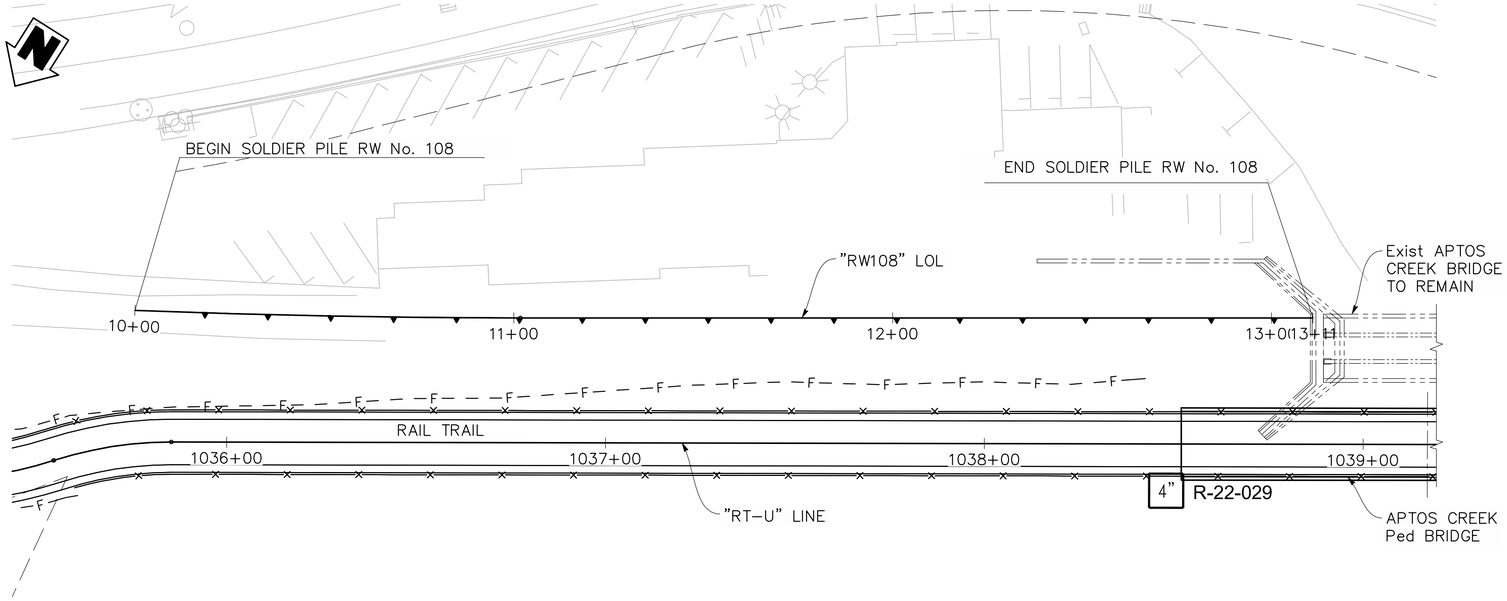

PLAN
1' = 20'

DRAFT - NOT FOR CONSTRUCTION

DESIGN OVERSIGHT	DRAWN BY	KIM OUYANG	L. BHANGOO, C. LANGBEIN, M. MCKEE	**PREPARED FOR THE STATE OF CALIFORNIA DEPARTMENT OF TRANSPORTATION**	KANDEEPAN SARAVANAPAVAN	BRIDGE NO. 36EXXX3	**RETAINING WALL No. 108**
SIGN OFF DATE	CHECKED BY	KRISHNA ADHIKARI	FIELD INVESTIGATION BY: DATE: DEC 2022 TO DEC 2023		PROJECT ENGINEER	POST MILES N/A	**LOG OF TEST BORING 1 OF 2**

GS GEOTECHNICAL LOG OF TEST BORINGS SHEET (ENGLISH) (REV. 03/14/12)

ORIGINAL SCALE IN INCHES FOR REDUCED PLANS 0 1 2 3

UNIT:
PROJECT NUMBER & PHASE: 0518000116 CONTRACT NO.: 05-0C7340

DISREGARD PRINTS BEARING EARLIER REVISION DATES →

REVISION DATES				SHEET	OF
				6	7

FILE => $REQUEST

USERNAME => $USER DATE PLOTTED => $DATE TIME PLOTTED => $TIME

NOTES:

Standard Penetration Test Sampler: I.D. = 1.4"; O.D. = 2" Modified California Sampler: I.D. = 2.5"; O.D. = 3" Hammer Assembly: A 140 lb hammer with a 30" drop (Automatic Hammer)

This LOTB sheet was prepared in accordance with the Caltrans Soil & Rock, Logging, Classification, and Presentation Manual (2022)

See Caltrans 2022 Standard Plans A10F, A10G for Soil Legend.

All dimensions are in feet unless otherwise shown

BOREHOLE LOCATION TABLE

Hole ID	Alignment Name	Station and Offset
R-22-029	"RT-U" Line	1038+48 12' Rt.

DIST	COUNTY	ROUTE	POST MILES TOTAL PROJECT	SHEET No	TOTAL SHEETS
05	SCR	1	8.1/10.7		

GEOTECHNICAL PROFESSIONAL DATE

PLANS APPROVAL DATE

REGISTERED PROFESSIONAL ENGINEER No. Exp. GEOTECHNICAL STATE OF CALIFORNIA

The State of California or its officers or agents shall not be responsible for the accuracy or completeness of scanned copies of this plan sheet.

MARK THOMS
701 UNIVERSITY AVE, STE 200
SACRAMENTO, CA 95825

PARIKH CONSULTANTS, INC.
1497 N MILPITAS BLVD.
MILPITAS, CA 95035

DRAFT

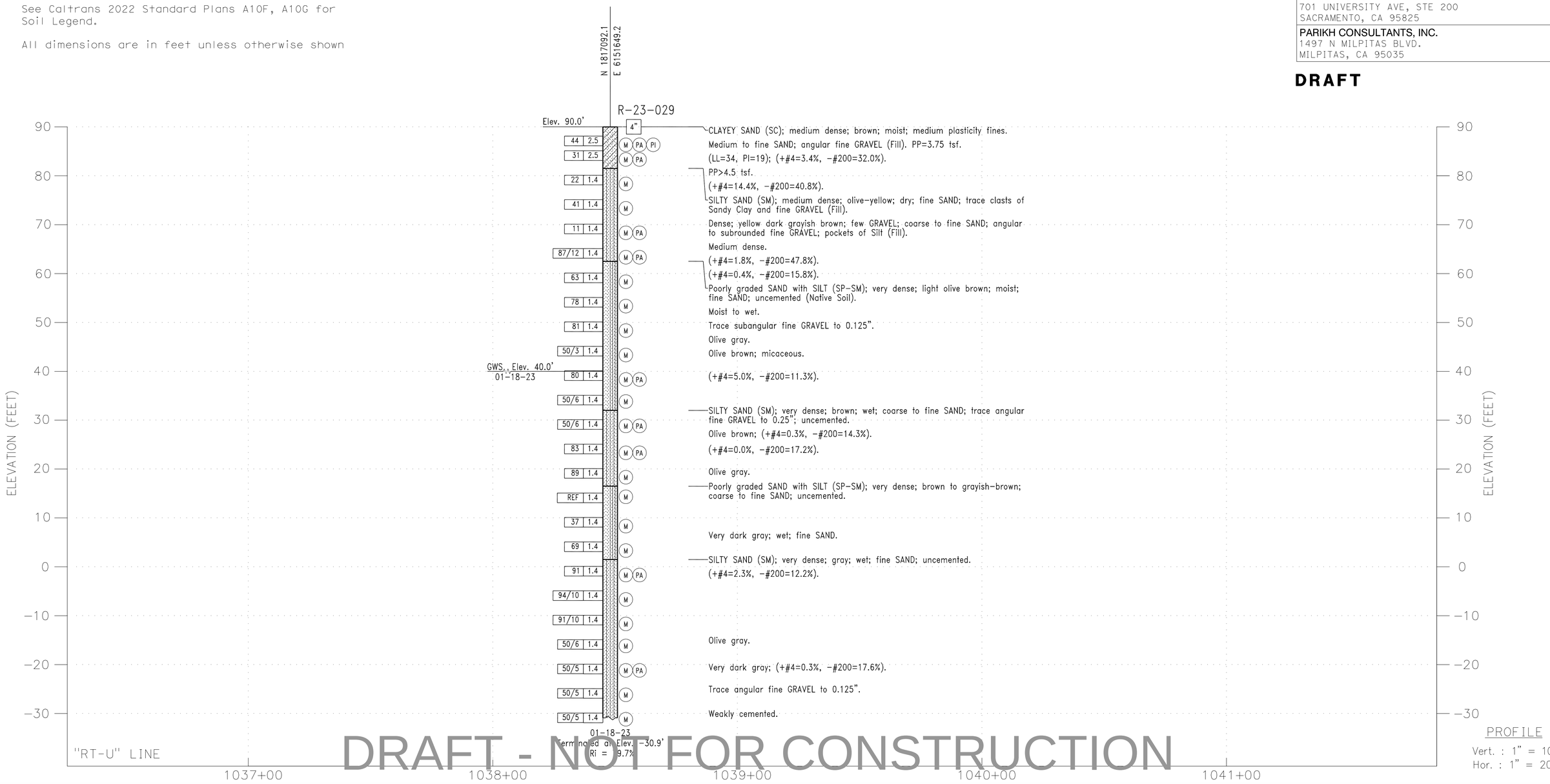

PROFILE
Vert. : 1" = 10'
Hor. : 1" = 20'

DRAFT - NOT FOR CONSTRUCTION

DESIGN OVERSIGHT	DRAWN BY	KIM OUYANG	L. BHANGOO, C. LANGBEIN, M. MCKEE	PREPARED FOR THE STATE OF CALIFORNIA DEPARTMENT OF TRANSPORTATION	KANDEEPAN SARAVANAPAVAN	BRIDGE NO. 36E-XXX3	RETAINING WALL No. 108
SIGN OFF DATE	CHECKED BY	KRISHNA ADHIKARI	FIELD INVESTIGATION BY: DATE: DEC 2022 TO DEC 2023		PROJECT ENGINEER	POST MILES N/A	LOG OF TEST BORINGS 2 OF 2

GS GEOTECHNICAL LOG OF TEST BORINGS SHEET (ENGLISH) (REV. 03/14/12)

ORIGINAL SCALE IN INCHES FOR REDUCED PLANS 0 1 2 3

UNIT: PROJECT NUMBER & PHASE: 0518000116 CONTRACT NO.: 05-0C7340

DISREGARD PRINTS BEARING EARLIER REVISION DATES

REVISION DATES | SHEET 7 | OF 7

FILE => $REQUEST

USERNAME => $USER DATE PLOTTED => $DATE TIME PLOTTED => $TIME

Dist	COUNTY	ROUTE	POST MILES TOTAL PROJECT	SHEET No.	TOTAL SHEETS
5	SCR	1	8.1/10.7	904	931

REGISTERED CIVIL ENGINEER DATE

PLANS APPROVAL DATE

REGISTERED PROFESSIONAL ENGINEER — MARSHALL EUGENE MOORE — No. S6557 — Exp. 9-30-25 STRUCTURAL — STATE OF CALIFORNIA

THE STATE OF CALIFORNIA OR ITS OFFICERS OR AGENTS SHALL NOT BE RESPONSIBLE FOR THE ACCURACY OR COMPLETENESS OF SCANNED COPIES OF THIS PLAN SHEET.

SCCRTC
1523 PACIFIC AVE
SANTA CRUZ, CA 95060

MARK THOMAS
701 UNIVERSITY AVE, STE 200
SACRAMENTO, CA 95825

MSE WALL DESIGN DATA

H	7′-6″	10′-0″	15′-0″	17′-6″	20′-0″
BW (L)	9′-6″ (8′-0″)	9′-6″ (8′-0″)	13′-6″ (12′-0″)	15′-6″ (14′-0″)	17′-6″ (16′-0″)
STEEL SOIL REINFORCEMENT	TOP 4 - W15xW15 @ 6 1 of 4 - W15xW15 @ 6 Bot 4 - W15xW15 @ 6	TOP 4 - W15xW15 @ 6 2 of 4 - W15xW15 @ 5 Bot 4 - W20xW15 @ 9	TOP 4 - W15xW15 @ 6 3 of 4 - W15xW15 @ 5 1 of 4 - W20xW15 @ 9 Bot 4 - W20xW15 @ 9	TOP 4 - W15xW15 @ 6 4 of 4 - W15xW15 @ 5 1 of 4 - W20xW15 @ 9 Bot 4 - W20xW15 @ 9	TOP 4 - W15xW15 @ 6 4 of 4 - W15xW15 @ 18 2 of 4 - W20xW15 @ 24 Bot 4 - W20xW15 @ 24

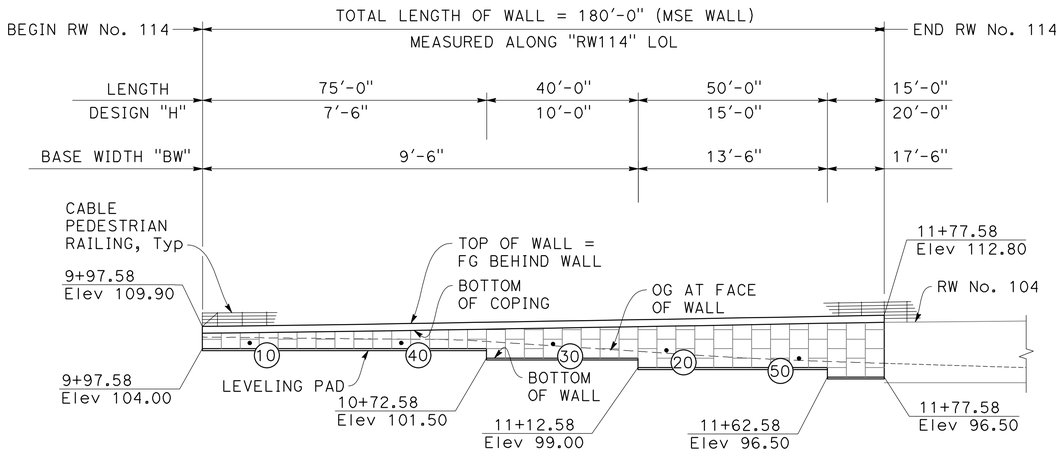

NOTES:

(40) Inspection Wire Location

Interval in years from the time of construction to the time of removal of inspection wire.

3 of 4 - W20 x W15 @ 24
3 of = 3 Levels of Reinforcement Mats with
4-W20 x = 4 Longitudinal Wires W20 sized by
W15 @ 24 = W15 sized Transverse Wires at 24-inch spacing

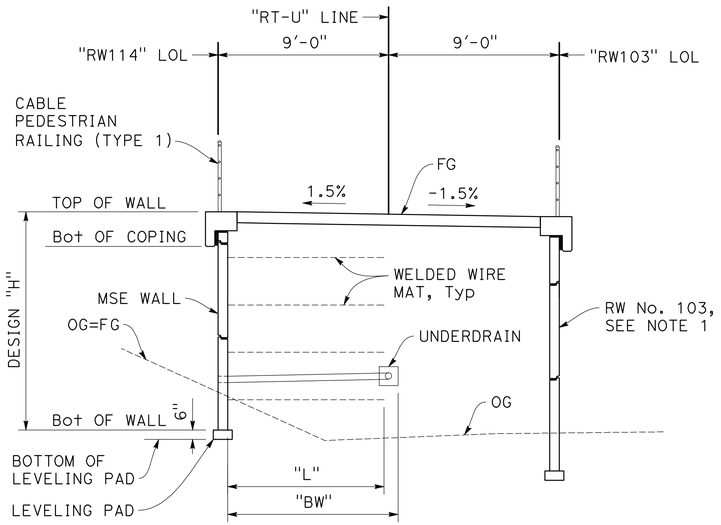

TYPICAL SECTION

1/4" = 1′-0"

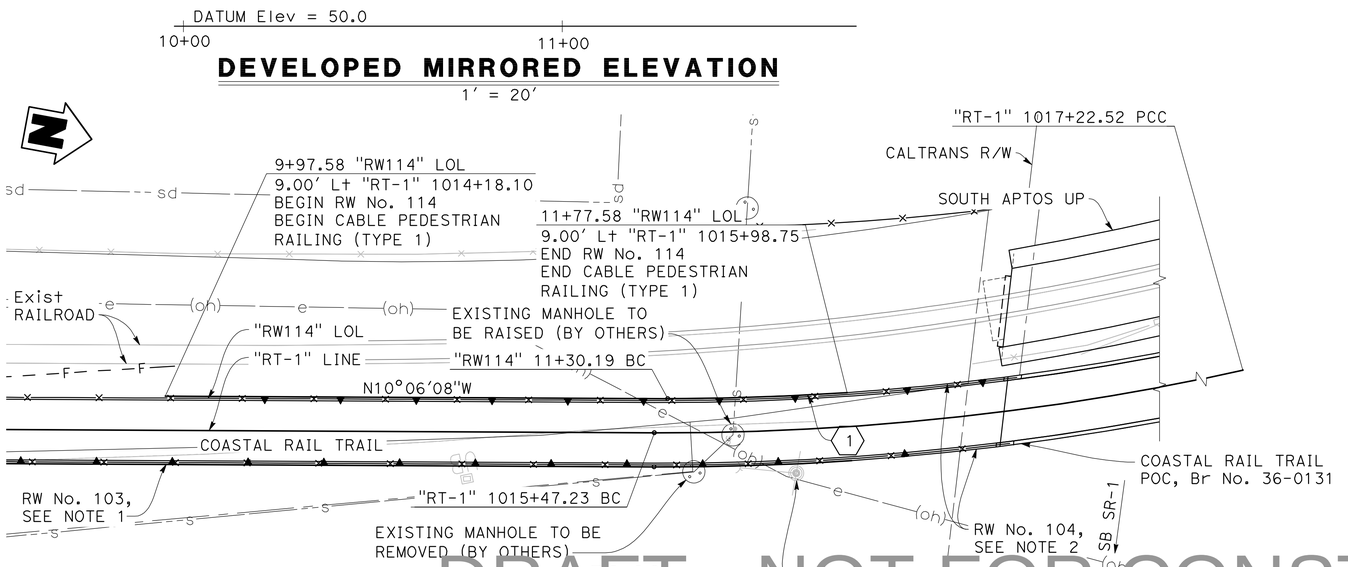

CURVE DATA

(1) "RW114" LOL
R = 699.00′
Δ = 03°53′05"
T = 23.71′
L = 47.39

NOTES:

1. For Retaining Wall No. 103, see "RETAINING WALL No. 103 GENERAL PLAN" sheet.
2. For Retaining Wall No. 104, see "RETAINING WALL No. 104 GENERAL PLAN" sheet.
3. This plan accurate for retaining wall work only.
4. The contractor shall verify controlling field dimensions before ordering or fabricating any material.
5. "L" indicates Soil Reinforcement Length.

DRAFT - NOT FOR CONSTRUCTION

DESIGN OVERSIGHT	DESIGN	BY T. FAIR/M. MOORE	CHECKED J. SAMPSON	SEISMIC ANALYSIS	BY X	CHECKED X	PREPARED FOR THE STATE OF CALIFORNIA DEPARTMENT OF TRANSPORTATION	M. MOORE PROJECT ENGINEER	BRIDGE No. N/A
	DETAILS	BY J. VALENZUELA	CHECKED J. SAMPSON	LAYOUT	BY M. MOORE	CHECKED J. SAMPSON			POST MILE N/A
SIGN OFF DATE	QUANTITIES	BY X	CHECKED X	SPECIFICATIONS	BY M. MOORE	PLANS AND SPECS COMPARED J. HICKEY			

RETAINING WALL No. 114
GENERAL PLAN

STRUCTURES DESIGN GENERAL PLAN SHEET (ENGLISH) (REVISION 2/8/2022)
DATE PLOTTED => 4/4/2025 TIME PLOTTED => 9:53 AM
FILE => RW114_01_GP.dwg USERNAME => ETANAKA
ORIGINAL SCALE IN INCHES FOR REDUCED PLANS 0 1 2 3

PROJECT NUMBER & PHASE: 05200000831
COUNTY/ROUTE: SCR/1
CONTRACT No.: 05-0C734
DISREGARD PRINTS BEARING EARLIER REVISION DATES

REVISION DATES				SHEET	OF
				1	12

Dist	COUNTY	ROUTE	POST MILES TOTAL PROJECT	SHEET No.	TOTAL SHEETS
5	SCR	1	8.1/10.7	905	931

REGISTERED CIVIL ENGINEER DATE

PLANS APPROVAL DATE

REGISTERED PROFESSIONAL ENGINEER — MARSHALL EUGENE MOORE — No. S6557 — Exp. 9-30-25 — STRUCTURAL — STATE OF CALIFORNIA

THE STATE OF CALIFORNIA OR ITS OFFICERS OR AGENTS SHALL NOT BE RESPONSIBLE FOR THE ACCURACY OR COMPLETENESS OF SCANNED COPIES OF THIS PLAN SHEET.

SCCRTC
1523 PACIFIC AVE
SANTA CRUZ, CA 95060

MARK THOMAS
701 UNIVERSITY AVE, STE 200
SACRAMENTO, CA 95825

GENERAL NOTES
LOAD & RESISTANCE FACTOR DESIGN

DESIGN:

AASHTO LRFD Bridge Design Specifications, 4th Edition with California Amendments.

Standard Plans and Specifications, 2023 Edition with Revised Standard Plans, dated January 2024.

Structural Technical Policies as of February 2023.

LIVE LOAD:

Surcharge = 90 lb/ft

SOIL PARAMETERS:

Internal design $\Phi = 34°$, Unit Weight (y) = 120 lb/ft^3

External design Φ (Retained Backfill) = 34°, y = 125 lb/ft^3

Φ (Foundation) = 30°

$K_h = 0.23$

PRECAST CONCRETE PANELS:

f'c = 4,000 psi (Concrete Compressive strength at 28 days)

fy = 60,000 psi (Yield strength of reinforcement)

SOIL REINFORCEMENT:

Welded Wire Mats: fy = 65,000 psi (Yield strength)

Coupler: fy = 36,000 psi (Yield strength)

Corrosion rate = 1.1 mils/year

REINFORCED CONCRETE:

f'_c = 3,6000 psi, except as noted
(Concrete compressive strength at 28 days)

fy = 60,000 psi (Yield Stength of reinforcement)

MSE = Mechanically Stabilized Embankment

QUANTITIES

MECHANICALLY STABILIZED EMBANKMENT	1,544	SF
STRUCTURAL CONCRETE, RETAINING WALL	18	CY
BAR REINFORCING STEEL (RETAINING WALL)	1,657	LB
BAR REINFORCING STEEL (GALVANIZED)	339	LB
CABLE PEDESTRIAN RAILING (TYPE 1)	180	LF

INDEX TO PLAN

SHEET No.	TITLE
1	GENERAL PLAN
2	GENERAL NOTES
3	MECHANICALLY STABILIZED EMBANKMENT DETAILS No. 1
4	MECHANICALLY STABILIZED EMBANKMENT DETAILS No. 2
5	MECHANICALLY STABILIZED EMBANKMENT DETAILS No. 3
6	MECHANICALLY STABILIZED EMBANKMENT DETAILS No. 4
7	MECHANICALLY STABILIZED EMBANKMENT DETAILS No. 5
8	CABLE PEDESTRIAN RAILING (TYPE 1) DETAILS No. 1
9	CABLE PEDESTRIAN RAILING (TYPE 1) DETAILS No. 2
10	LOG OF TEST BORING 1 OF 3
11	LOG OF TEST BORING 2 OF 3
12	LOG OF TEST BORING 3 OF 3

TOP OF WALL ELEVATION TABLE

	WALL LOL STATION	TOP OF WALL Elev
BEGIN RW No. 114 →	10+00.00	109.92
	10+25.00	110.21
	10+50.00	110.60
	10+75.00	111.01
	11+00.00	111.43
	11+25.00	111.84
	11+50.00	112.29
	11+75.00	112.75
END RW No. 114 →	11+77.58	112.80

DRAFT - NOT FOR CONSTRUCTION

DESIGN OVERSIGHT

SIGN OFF DATE

	BY	CHECKED
DESIGN	T. FAIR	J. SAMPSON
DETAILS	J. VALENZUELA	J. SAMPSON
QUANTITIES	X	X

PREPARED FOR THE STATE OF CALIFORNIA DEPARTMENT OF TRANSPORTATION

M. MOORE
PROJECT ENGINEER

BRIDGE No. N/A
POST MILE N/A

RETAINING WALL No. 114
GENERAL NOTES

STRUCTURES DESIGN DETAIL SHEET (ENGLISH) (REVISION 8/16/2021)

DATE PLOTTED => 4/4/2025
FILE => RW114_02_GN.dwg

TIME PLOTTED => 10:04 AM
USERNAME => ETANAKA

ORIGINAL SCALE IN INCHES FOR REDUCED PLANS 0 1 2 3

PROJECT NUMBER & PHASE: 05200000831

COUNTY/ROUTE: SCR/1
CONTRACT No.: 05-0C734

DISREGARD PRINTS BEARING EARLIER REVISION DATES →

REVISION DATES					SHEET	OF
					2	12

Dist	COUNTY	ROUTE	POST MILES TOTAL PROJECT	SHEET No.	TOTAL SHEETS
5	SCR	1	8.1/10.7	906	931

REGISTERED CIVIL ENGINEER DATE

PLANS APPROVAL DATE

REGISTERED PROFESSIONAL ENGINEER
MARSHALL EUGENE MOORE
No. S6557
Exp. 09-30-25
STRUCTURAL
STATE OF CALIFORNIA

THE STATE OF CALIFORNIA OR ITS OFFICERS OR AGENTS SHALL NOT BE RESPONSIBLE FOR THE ACCURACY OR COMPLETENESS OF SCANNED COPIES OF THIS PLAN SHEET.

THE REGISTERED CIVIL ENGINEER FOR THE PROJECT IS RESPONSIBLE FOR THE SELECTION AND PROPER APPLICATION OF THE COMPONENT DESIGN AND ANY MODIFICATIONS SHOWN.

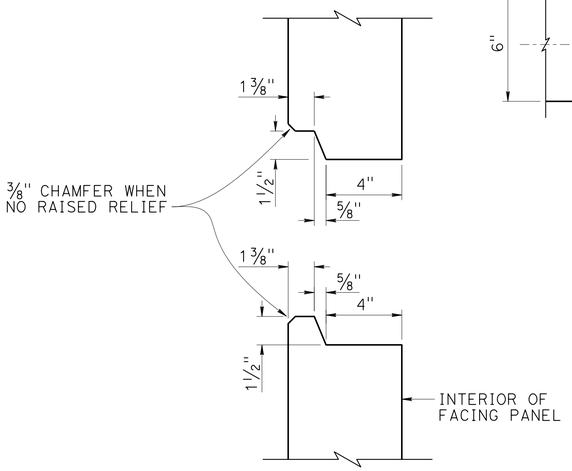

HORIZONTAL JOINT DETAIL
3" = 1'-0"

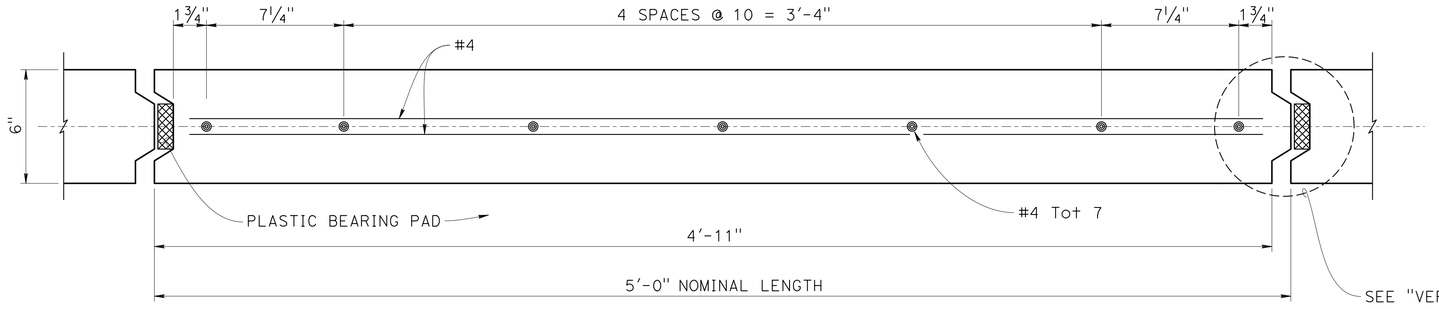

(1) NOTE: 5'-0" panel shown, shorter length similar.

PLAN - FACING PANEL
3" = 1'-0"

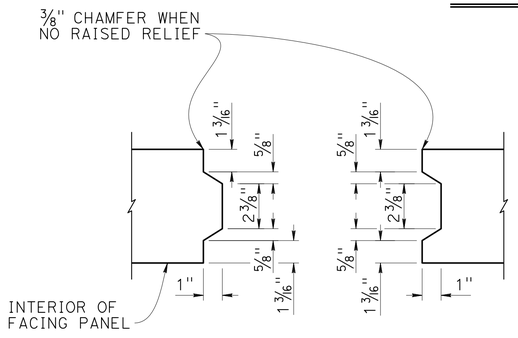

VERTICAL JOINT DETAIL
3" = 1'-0"

LEGEND:

Plain Plastic Bearing Pad

NOTES:

1. Concrete Surface Texture and treatment not shown.
2. Place Plain Plastic Bearing Pads in all of the panel joints between the panels. Place one in each vertical joint where the horizontal joints intersect. Place two per panel in each horizontal joint:

   3/4" x 2 3/8" x 6" for Vertical Joints
   3/4" x 4" x 6" for Horizontal Joints
3. Bond a strip of Filter Fabric Class A, 1'-0" wide, over the full length of all panel joints.
4. Top layer of welded wire mats attached parallel to top of panel when top of wall is angled or curved.
5. Eliminate mid-level mat when closer than 6" to top mat, continue variable dimensions between remaining mats.

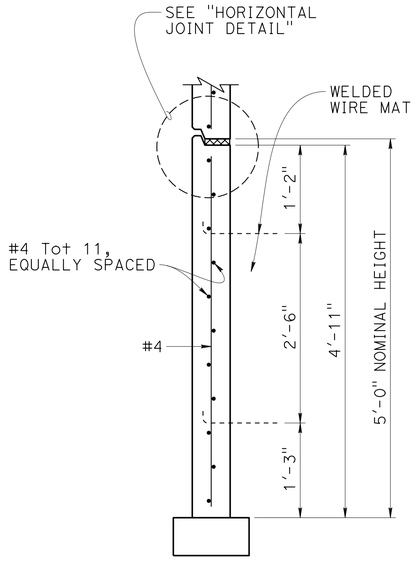

BOTTOM PANEL
1" = 1'-0"

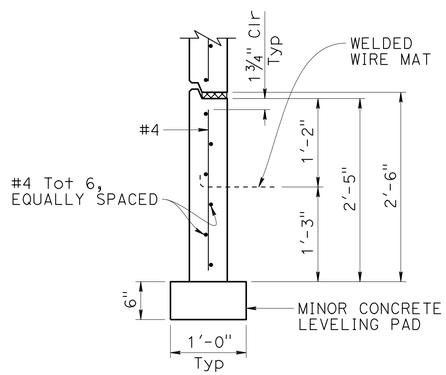

BOTTOM HALF PANEL
1" = 1'-0"

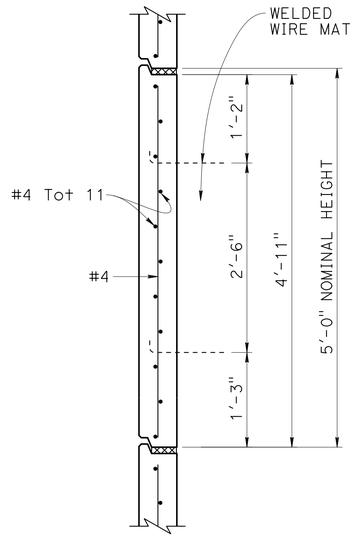

INTERMEDIATE PANEL
1" = 1'-0"

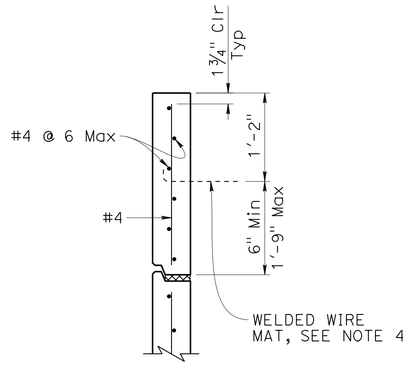

TOP HALF PANEL
1" = 1'-0"

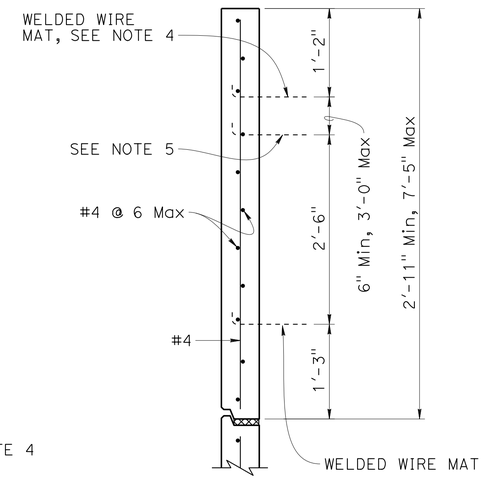

TOP PANEL WITH MULTIPLE MATS
1" = 1'-0"

DRAFT - NOT FOR CONSTRUCTION

REVISED BRIDGE STANDARD DETAILS

xs13-020-1	April 2024	The components of the Bridge Standard Details have been prepared under the responsible charge of the Technical Owner, a registered civil engineer in the State of California
FILE No.	APPROVAL DATE	

(1) Note added

STATE OF CALIFORNIA
DEPARTMENT OF TRANSPORTATION

DIVISION OF ENGINEERING SERVICES

BRIDGE No. 36-XXXX
POST MILE X.X

SPECIAL DETAILS
RETAINING WALL No. 114
MECHANICALLY STABILIZED EMBANKMENT DETAILS No. 1

Refer to: http://www.dot.ca.gov/hq/esc/techpubs/manual/bridgemanuals/bridge-standard-detail-sheets/index.html

DATE PLOTTED => 24-MAR-2025 TIME PLOTTED => 08:10
FILE => RW114_03_xs13-020-1.dgn USERNAME => jvalenzuel

ORIGINAL SCALE IN INCHES FOR REDUCED PLANS 0 1 2 3

UNIT: XXXX COUNTY/ROUTE/ZONE: SCR/1
PROJECT NUMBER & PHASE: 05200000831 CONTRACT No.: 05-0C734

DISREGARD PRINTS BEARING EARLIER REVISION DATES →

REVISION DATES					SHEET	OF
					3	12

Dist	COUNTY	ROUTE	POST MILES TOTAL PROJECT	SHEET No.	TOTAL SHEETS
5	SCR	1	8.1/10.7	907	931

REGISTERED CIVIL ENGINEER DATE

PLANS APPROVAL DATE

REGISTERED PROFESSIONAL ENGINEER — MARSHALL EUGENE MOORE — No. S6557 — Exp. 09-30-25 — STRUCTURAL — STATE OF CALIFORNIA

THE STATE OF CALIFORNIA OR ITS OFFICERS OR AGENTS SHALL NOT BE RESPONSIBLE FOR THE ACCURACY OR COMPLETENESS OF SCANNED COPIES OF THIS PLAN SHEET.

THE REGISTERED CIVIL ENGINEER FOR THE PROJECT IS RESPONSIBLE FOR THE SELECTION AND PROPER APPLICATION OF THE COMPONENT DESIGN AND ANY MODIFICATIONS SHOWN.

(2) GENERAL NOTES
LOAD AND RESISTANCE FACTOR DESIGN

DESIGN:
AASHTO LRFD Bridge Design Specifications, 2007 edition with California Amendments

LIVE LOADING:
2'-0" Live Load Surcharge

SEISMIC LOADING:
K_h = 0.2

REINFORCED CONCRETE:
f_y = 60 ksi
f'_c = 3.6 ksi

PRECAST CONCRETE PANELS:
f_y = 60 ksi
f'_c = 4.0 ksi

SOIL REINFORCEMENT:
Welded Wire Mats: F_y = 65 ksi
Coupler: F_y = 36 ksi
Corrosion rate = 1.1 mils/year

SOIL PARAMETERS:
Internal Design Φ = 34°, γ = 0.120 kip/ft
External Design Φ (Retained Backfill) = 30°, γ = 0.120 kip/ft
Φ (Foundation) = 30°

NOTES:

1. Distance as required to permit Coupler to be swaged.
2. Place #4 x 3'-2", centered on Connector Mat, but not welded to it.
3. All Transverse Wires size W15 at various spacing as shown elsewhere.
4. Size of Longitudinal Wires shown elsewhere.

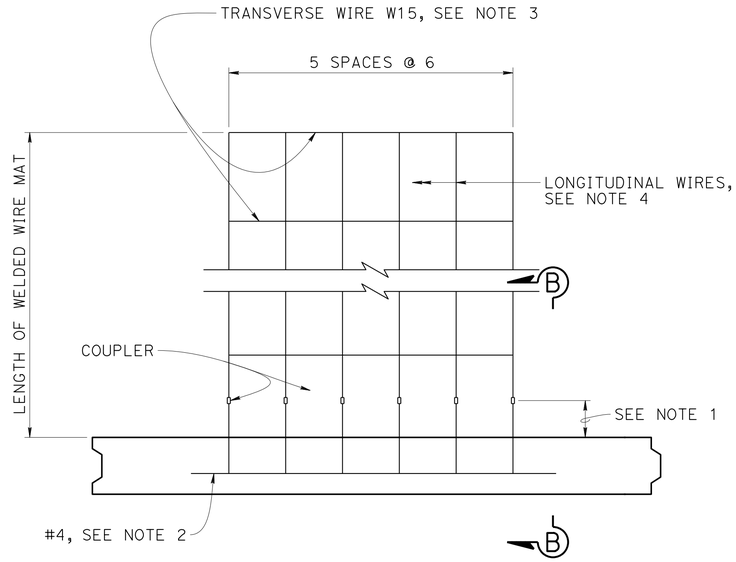

(1) NOTE: 5'-0" panel shown, shorter length similar.

PLAN (SIX WELDED WIRE MAT)
NO SCALE

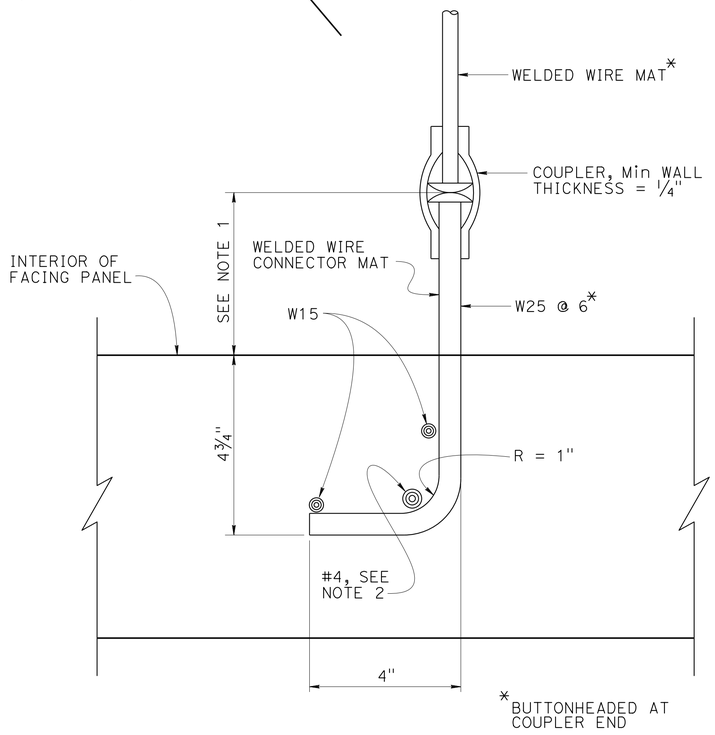

SECTION B-B
6" = 1'-0"

NOTE: Panel reinforcement not shown.

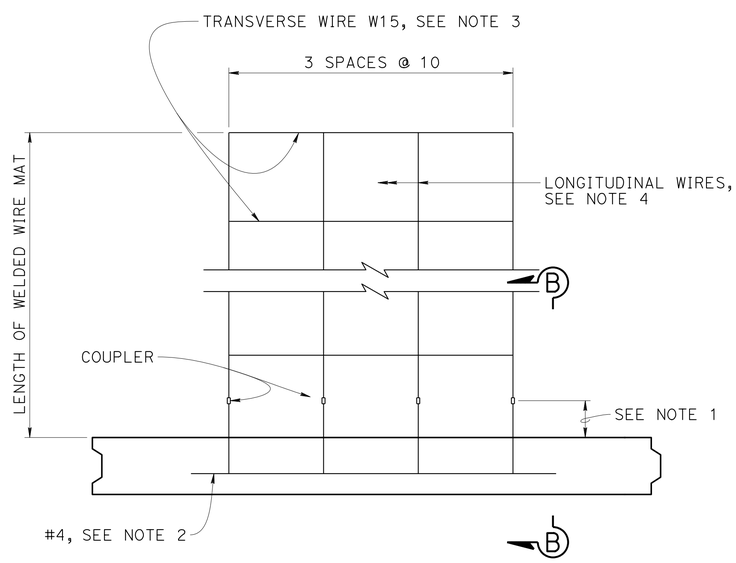

(1) NOTE: 5'-0" panel shown, shorter length similar.

PLAN (FOUR WELDED WIRE MAT)
NO SCALE

DRAFT - NOT FOR CONSTRUCTION

BRIDGE STANDARD DETAILS

xs13-020-2	April 2024	The components of the Bridge Standard Details have been prepared under the responsible charge of the Technical Owner, a registered civil engineer in the State of California
FILE No.	APPROVAL DATE	

(1) Note added
(2) Not used. See "GENERAL NOTES" sheet.

STATE OF CALIFORNIA
DEPARTMENT OF TRANSPORTATION

DIVISION OF ENGINEERING SERVICES

BRIDGE No. 36-XXXX
POST MILE X.X

SPECIAL DETAILS

RETAINING WALL No. 114

MECHANICALLY STABILIZED EMBANKMENT DETAILS No. 2

Refer to: http://www.dot.ca.gov/hq/esc/techpubs/manual/bridgemanuals/bridge-standard-detail-sheets/index.html

DATE PLOTTED => 24-MAR-2025 TIME PLOTTED => 08:11
FILE => RW114_04_xs13-020-2.dgn USERNAME => jvalenzuel

ORIGINAL SCALE IN INCHES FOR REDUCED PLANS 0 1 2 3

UNIT: XXXX
PROJECT NUMBER & PHASE: 05200000831
COUNTY/ROUTE/ZONE: SCR/1
CONTRACT No.: 05-0C734

DISREGARD PRINTS BEARING EARLIER REVISION DATES →

REVISION DATES				SHEET	OF
				4	12

Dist	COUNTY	ROUTE	POST MILES TOTAL PROJECT	SHEET No.	TOTAL SHEETS
5	SCR	1	8.1/10.7	908	931

REGISTERED CIVIL ENGINEER _____ DATE _____

PLANS APPROVAL DATE _____

REGISTERED PROFESSIONAL ENGINEER
MARSHALL EUGENE MOORE
No. S6557
Exp. 09-30-25
STRUCTURAL
STATE OF CALIFORNIA

THE STATE OF CALIFORNIA OR ITS OFFICERS OR AGENTS SHALL NOT BE RESPONSIBLE FOR THE ACCURACY OR COMPLETENESS OF SCANNED COPIES OF THIS PLAN SHEET.

THE REGISTERED CIVIL ENGINEER FOR THE PROJECT IS RESPONSIBLE FOR THE SELECTION AND PROPER APPLICATION OF THE COMPONENT DESIGN AND ANY MODIFICATIONS SHOWN.

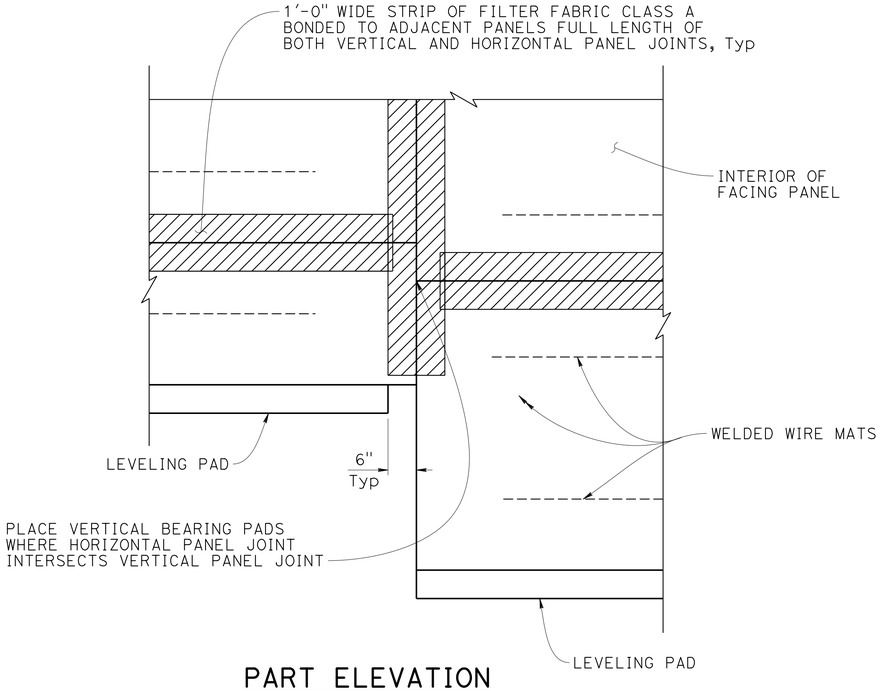

PART ELEVATION

3/4" = 1'-0"

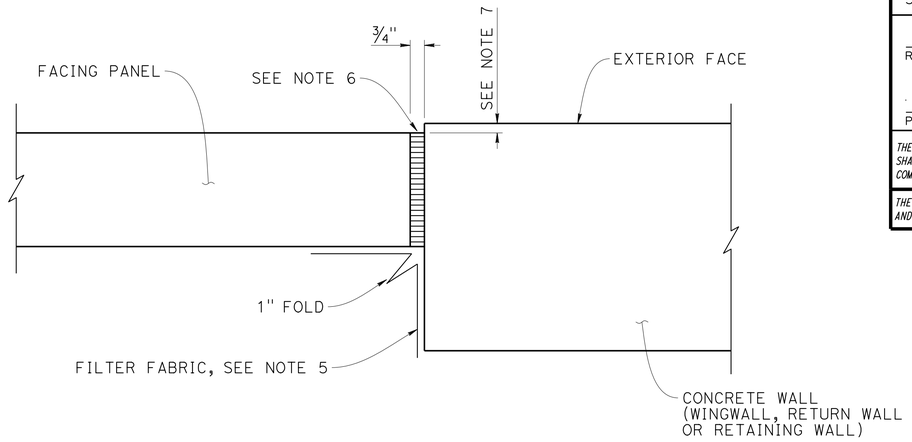

MSE FACING PANEL-TO-CONCRETE WALL JOINT DETAIL

3" = 1'-0"

NOTES:

1. Center inspection wire in Facing Panel.
2. Fabricate inspection wire from W11 wire representative of the welded wire mats, with 3/8"ø-16 UNC threads for at least 1 1/2" of one end.
3. Place inspection wire horizontal and perpendicular to the wall panel prior to backfilling.
4. Encapsulate threaded end with corrosion inhibiting mastic, vinyl covering, and secure with plastic tie.
5. Bond a strip of Filter Fabric Class A, 1'-6" wide, to back of MSE panels and the adjacent concrete wall for entire length of vertical joint.
6. Bond Expansion Joint Filler to the Concrete Wall.
7. Offset between face of MSE Facing Panel and face of the Concrete Wall as dictated by location of layout lines shown elsewhere.

LEGEND:

- Filter Fabric Class A
- Neoprene Plug
- Expansion Joint Filler
- UNC Unified Coarse Thread

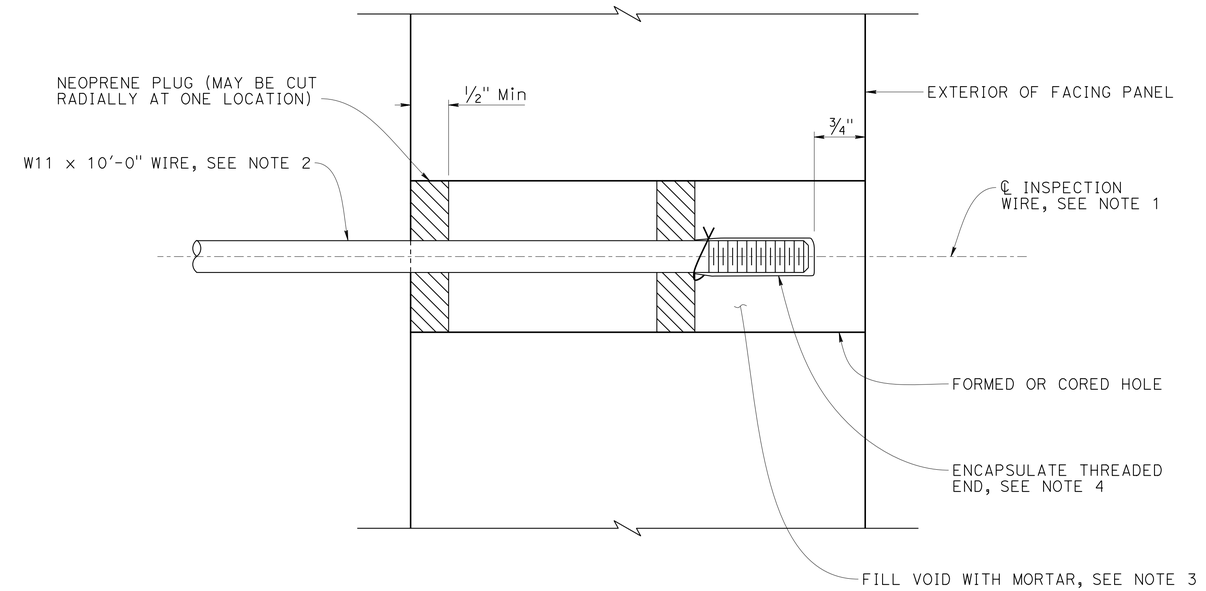

INSPECTION WIRE DETAIL

NO SCALE

DRAFT - NOT FOR CONSTRUCTION

BRIDGE STANDARD DETAILS

xs13-020-3 (FILE No.) | April 2024 (APPROVAL DATE)

The components of the Bridge Standard Details have been prepared under the responsible charge of the Technical Owner, a registered civil engineer in the State of California

STATE OF CALIFORNIA
DEPARTMENT OF TRANSPORTATION

DIVISION OF ENGINEERING SERVICES

BRIDGE No. 36-XXXX
POST MILE X.X

RETAINING WALL No. 114

MECHANICALLY STABILIZED EMBANKMENT DETAILS No. 3

Refer to: http://www.dot.ca.gov/hq/esc/techpubs/manual/bridgemanuals/bridge-standard-detail-sheets/index.html

DATE PLOTTED => 24-MAR-2025 TIME PLOTTED => 08:11
FILE => RW114_05_xs13-020-3.dgn USERNAME => jvalenzuel

ORIGINAL SCALE IN INCHES FOR REDUCED PLANS 0 1 2 3

UNIT: XXXX COUNTY/ROUTE/ZONE: SCR/1
PROJECT NUMBER & PHASE: 05200000831 CONTRACT No.: 05-0C734

DISREGARD PRINTS BEARING EARLIER REVISION DATES →

REVISION DATES

SHEET 5 OF 12

Dist	COUNTY	ROUTE	POST MILES TOTAL PROJECT	SHEET No.	TOTAL SHEETS
5	SCR	1	8.1/10.7	909	931

REGISTERED CIVIL ENGINEER DATE

PLANS APPROVAL DATE

REGISTERED PROFESSIONAL ENGINEER
MARSHALL EUGENE MOORE
No. S6557
Exp. 9-30-25
STRUCTURAL
STATE OF CALIFORNIA

THE STATE OF CALIFORNIA OR ITS OFFICERS OR AGENTS SHALL NOT BE RESPONSIBLE FOR THE ACCURACY OR COMPLETENESS OF SCANNED COPIES OF THIS PLAN SHEET.

SCCRTC
1523 PACIFIC AVE
SANTA CRUZ, CA 95060

MARK THOMAS
701 UNIVERSITY AVE, STE 200
SACRAMENTO, CA 95825

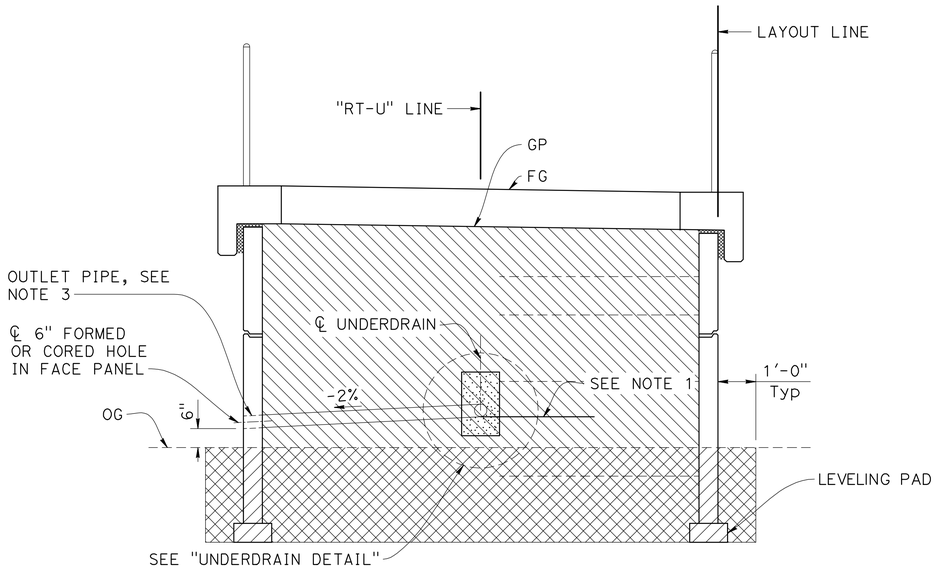

LIMITS OF EXCAVATION AND BACKFILL TWO WALLS

NO SCALE

NOTES:

1. Locate underdrain behind bottom level of welded wire mats wherever possible, or at elevation needed to drain.
2. Place perforated pipe underdrain of diameter shown elsewhere on plans or minimum 4" ø smoothed wall PVC or minimum 8" ø corrugated HDPE.
3. Maximum spacing of Outlet Pipe and Cleanout Pipes is 200 feet.
4. At sags in profile of underdrain, install Outlet Pipe for each direction of flow.

LEGEND:

Structure Excavation

Structure Backfill

Permeable Material

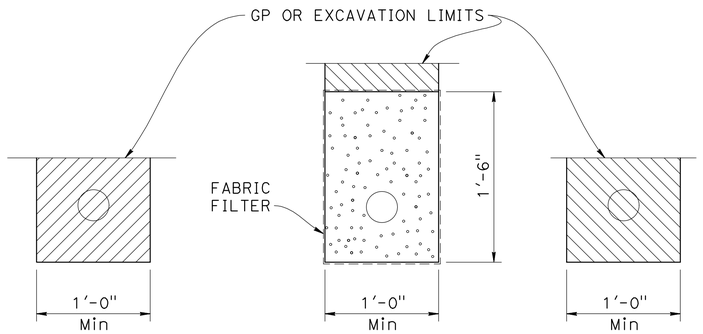

EXCAVATION BACKFILL

UNPERFORATED OUTLET OR CLEAN OUT PIPE FOR UNDERDRAIN

NO SCALE

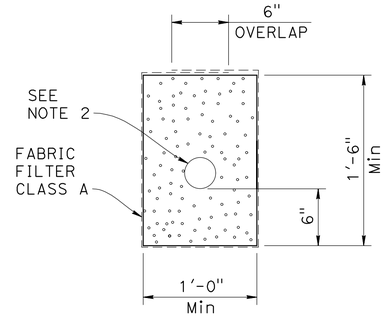

UNDERDRAIN DETAIL

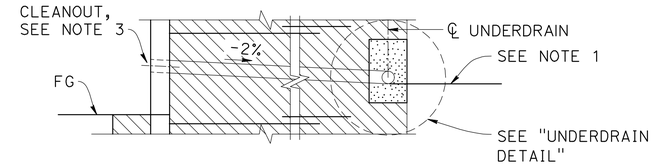

CLEANOUT DETAIL

NO SCALE

DRAFT - NOT FOR CONSTRUCTION

DESIGN OVERSIGHT	DESIGN	BY T. FAIR/M. MOORE	CHECKED J. SAMPSON	SEISMIC ANALYSIS	BY X	CHECKED X	PREPARED FOR THE STATE OF CALIFORNIA DEPARTMENT OF TRANSPORTATION	M. MOORE PROJECT ENGINEER
	DETAILS	BY J. VALENZUELA	CHECKED J. SAMPSON	LAYOUT	BY M. MOORE	CHECKED J. SAMPSON		
SIGN OFF DATE	QUANTITIES	BY X	CHECKED X	SPECIFICATIONS	BY M. MOORE	PLANS AND SPECS COMPARED J. HICKEY		

BRIDGE No. N/A
POST MILE N/A

RETAINING WALL No. 114

MECHANICALLY STABILIZED EMBANKMENT DETAILS No. 4

STRUCTURES DESIGN GENERAL PLAN SHEET (ENGLISH) (REVISION 2/8/2022)

DATE PLOTTED => 3/24/2025
FILE => RW114_06_DT4.dwg

TIME PLOTTED => 8:05 AM
USERNAME => JVALENZUELA

ORIGINAL SCALE IN INCHES FOR REDUCED PLANS 0 1 2 3

PROJECT NUMBER & PHASE:05200000831

COUNTY/ROUTE: SCR/1
CONTRACT No.: 05-0C734

DISREGARD PRINTS BEARING EARLIER REVISION DATES

REVISION DATES				SHEET	OF
				6	12

Dist	COUNTY	ROUTE	POST MILES TOTAL PROJECT	SHEET No.	TOTAL SHEETS
5	SCR	1	8.1/10.7	910	931

REGISTERED CIVIL ENGINEER DATE

PLANS APPROVAL DATE

REGISTERED PROFESSIONAL ENGINEER — MARSHALL EUGENE MOORE — No. S6557 — Exp. 9-30-25 — STRUCTURAL — STATE OF CALIFORNIA

THE STATE OF CALIFORNIA OR ITS OFFICERS OR AGENTS SHALL NOT BE RESPONSIBLE FOR THE ACCURACY OR COMPLETENESS OF SCANNED COPIES OF THIS PLAN SHEET.

SCCRTC
1523 PACIFIC AVE
SANTA CRUZ, CA 95060

MARK THOMAS
701 UNIVERSITY AVE, STE 200
SACRAMENTO, CA 95825

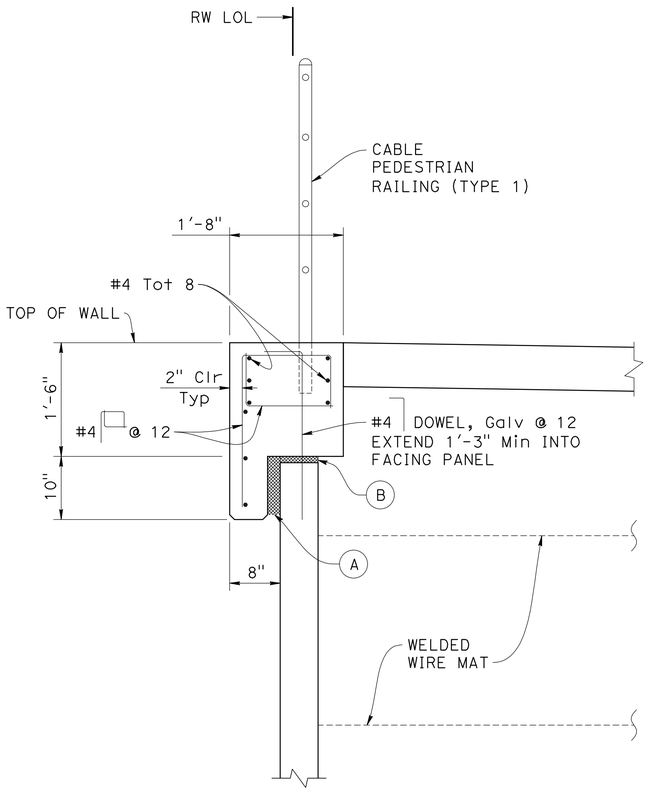

COPING AND RAILING DETAIL
1/4" = 1'-0"

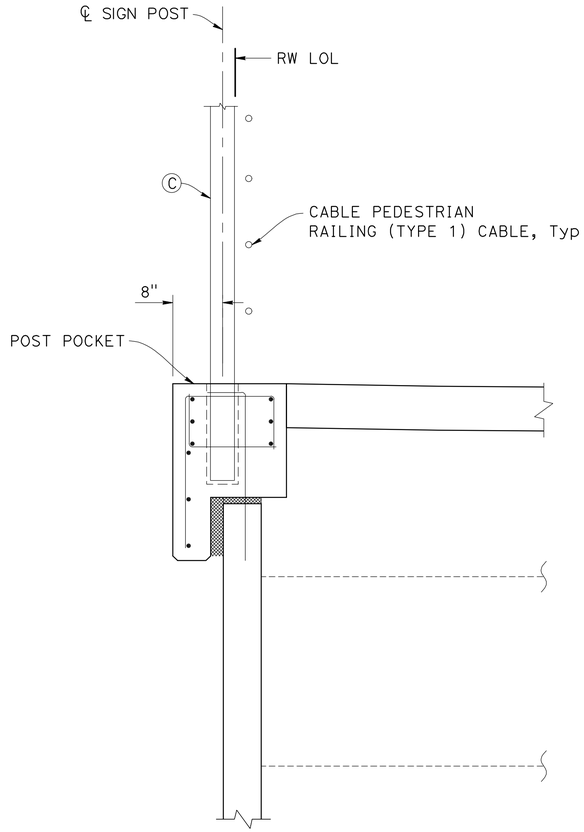

COPING AND SIGN POST DETAIL
1/4" = 1'-0"

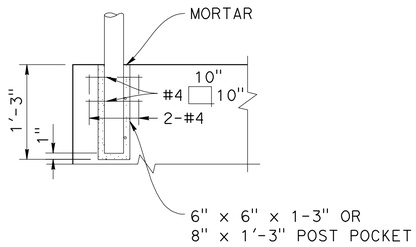

POST POCKET DETAIL
1/4" = 1'-0"

FOR DETAILS NOT SHOWN, SEE "COPING AND RAILING DETAILS"

NOTES:

(A) 2" Expanded Polystyrene

(B) 1" Expanded Polystyrene

(C) See "SIGN PLANS" for Post and Sign Details and Location.

DRAFT - NOT FOR CONSTRUCTION

DESIGN OVERSIGHT	DESIGN	BY T. FAIR	CHECKED J. SAMPSON	PREPARED FOR THE STATE OF CALIFORNIA DEPARTMENT OF TRANSPORTATION	M. MOORE PROJECT ENGINEER
SIGN OFF DATE	DETAILS	BY J. VALENZUELA	CHECKED J. SAMPSON		BRIDGE No. N/A
	QUANTITIES	BY X	CHECKED X		POST MILE N/A

RETAINING WALL No. 114

MECHANICALLY STABILIZED EMBANKMENT DETAILS No. 5

STRUCTURES DESIGN DETAIL SHEET (ENGLISH) (REVISION 8/16/2021)

DATE PLOTTED => 3/24/2025
FILE => RW114_07_DT5.dwg

TIME PLOTTED => 8:07 AM
USERNAME => JVALENZUELA

ORIGINAL SCALE IN INCHES FOR REDUCED PLANS 0 1 2 3

PROJECT NUMBER & PHASE: 05200000831

COUNTY/ROUTE: SCR/1
CONTRACT No.: 05-0C734

DISREGARD PRINTS BEARING EARLIER REVISION DATES →

REVISION DATES					SHEET	OF
					7	12

Dist	COUNTY	ROUTE	POST MILES TOTAL PROJECT	SHEET No.	TOTAL SHEETS
5	SCR	1	8.1/10.7	911	931

REGISTERED CIVIL ENGINEER DATE

PLANS APPROVAL DATE

REGISTERED PROFESSIONAL ENGINEER — MARSHALL EUGENE MOORE — No. S6557 — Exp. 9-30-25 STRUCTURAL — STATE OF CALIFORNIA

THE STATE OF CALIFORNIA OR ITS OFFICERS OR AGENTS SHALL NOT BE RESPONSIBLE FOR THE ACCURACY OR COMPLETENESS OF SCANNED COPIES OF THIS PLAN SHEET.

SCCRTC
1523 PACIFIC AVE
SANTA CRUZ, CA 95060

MARK THOMAS
701 UNIVERSITY AVE, STE 200
SACRAMENTO, CA 95825

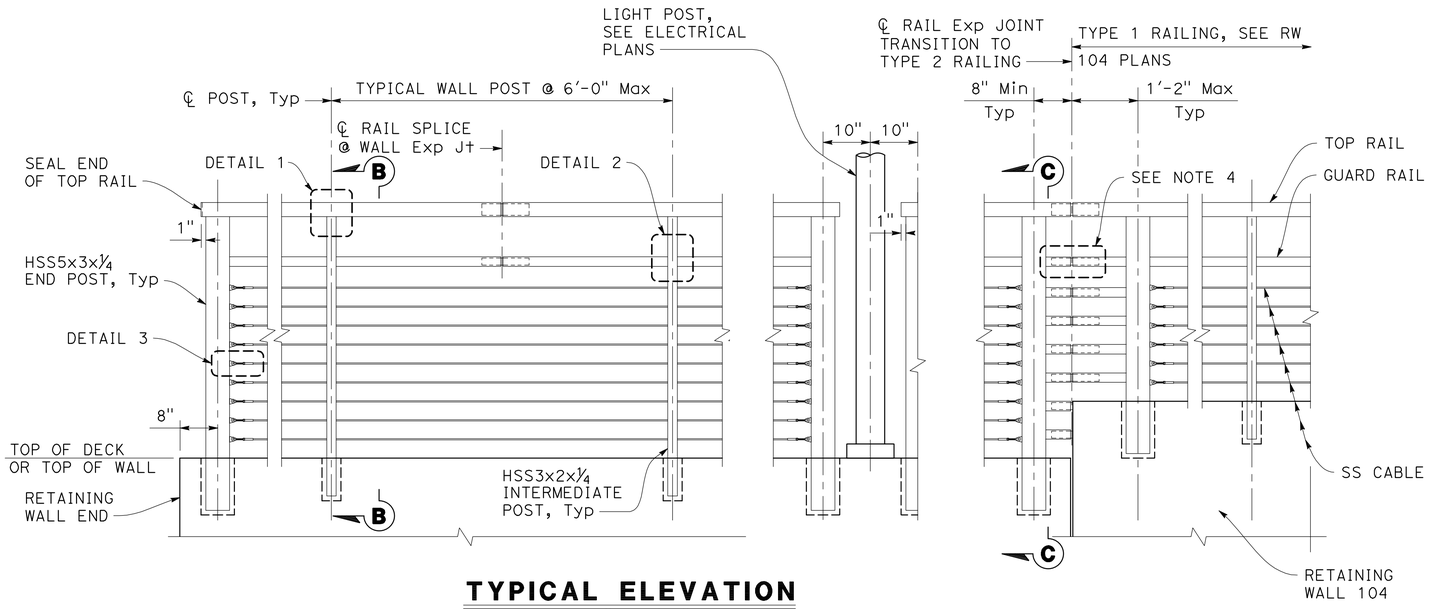

TYPICAL ELEVATION

3/4" = 1'-0"

NOTES:

1. All components of the cable pedestrian railings must be hot dipped galvanized and finished with Natina stain.
2. All HSS members to comply with ASTM A500/A500m, Grade B. All other steel to comply with ASTM A36/A36M.
3. Orient tube seams to be on outside face of railing (i.e. not facing trail).
4. For cable pedestrian railing details and turnbuckle details, see "CABLE PEDESTRIAN RAILING DETAILS No. 2" sheet.

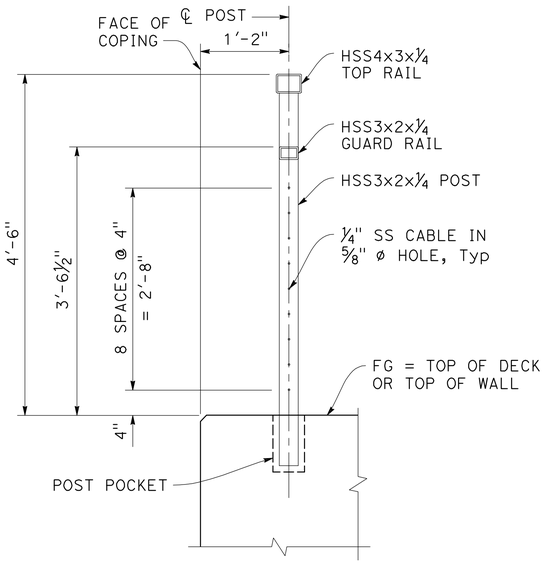

SECTION B-B

1" = 1'-0"

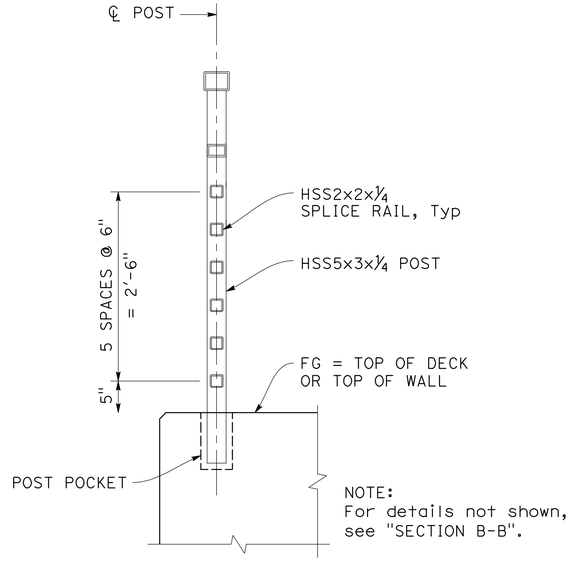

SECTION C-C

1" = 1'-0"

DRAFT - NOT FOR CONSTRUCTION

DESIGN OVERSIGHT			
SIGN OFF DATE			
DESIGN	BY T. FAIR	CHECKED J. SAMPSON	
DETAILS	BY J. VALENZUELA	CHECKED J. SAMPSON	
QUANTITIES	BY X	CHECKED X	

PREPARED FOR THE STATE OF CALIFORNIA DEPARTMENT OF TRANSPORTATION

M. MOORE
PROJECT ENGINEER

BRIDGE No.	N/A
POST MILE	N/A

RETAINING WALL No. 114

CABLE PEDESTRIAN RAILING (TYPE 1) DETAILS No. 1

STRUCTURES DESIGN DETAIL SHEET (ENGLISH) (REVISION 8/16/2021)

DATE PLOTTED => 3/24/2025
FILE => RW114_08_CRDT1.dwg
TIME PLOTTED => 8:08 AM
USERNAME => JVALENZUELA

ORIGINAL SCALE IN INCHES FOR REDUCED PLANS 0 1 2 3

PROJECT NUMBER & PHASE: 05200000831
COUNTY/ROUTE: SCR/1
CONTRACT No.: 05-0C734

DISREGARD PRINTS BEARING EARLIER REVISION DATES →

REVISION DATES					SHEET	OF
					8	12

Dist	COUNTY	ROUTE	POST MILES TOTAL PROJECT	SHEET No.	TOTAL SHEETS
5	SCR	1	8.1/10.7	912	931

REGISTERED CIVIL ENGINEER DATE

PLANS APPROVAL DATE

REGISTERED PROFESSIONAL ENGINEER — MARSHALL EUGENE MOORE — No. S6557 — Exp. 9-30-25 — STRUCTURAL — STATE OF CALIFORNIA

THE STATE OF CALIFORNIA OR ITS OFFICERS OR AGENTS SHALL NOT BE RESPONSIBLE FOR THE ACCURACY OR COMPLETENESS OF SCANNED COPIES OF THIS PLAN SHEET.

SCCRTC
1523 PACIFIC AVE
SANTA CRUZ, CA 95060

MARK THOMAS
701 UNIVERSITY AVE, STE 200
SACRAMENTO, CA 95825

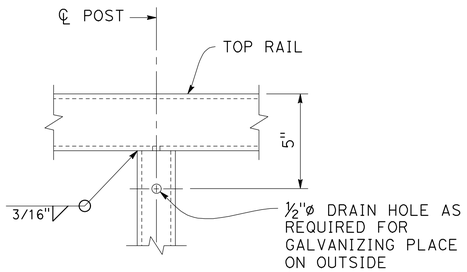

DETAIL 1
3" = 1'-0"

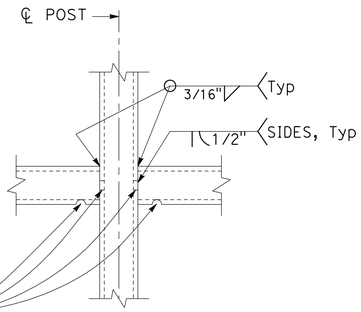

DETAIL 2
3" = 1'-0"

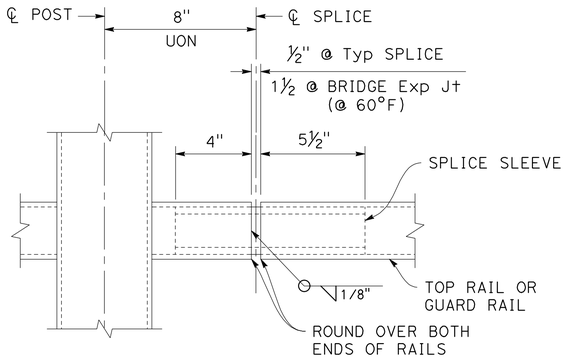

TYPICAL RAIL SPLICE DETAIL
3" = 1'-0"

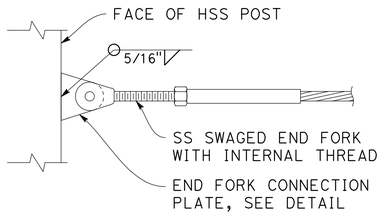

DETAIL 3
NO SCALE

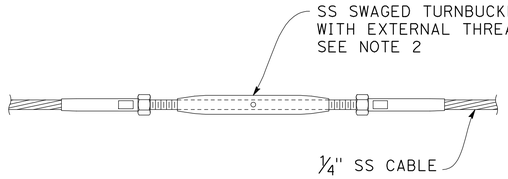

TYPICAL TURNBUCKLE DETAIL
NO SCALE

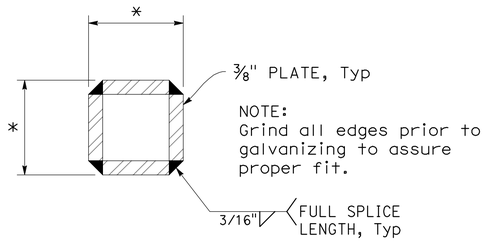

* The difference between the out-to-out rail splice sleeve dimensions and the clear inside dimensions of the tubular steel rail elements must not exceed 3/16" after galvanizing

SPLICE SLEEVE
NO SCALE

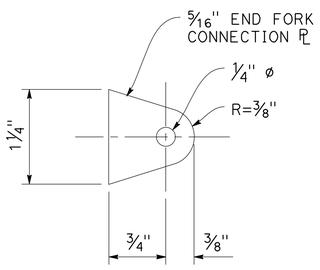

END FORK CONNECTION PLATE DETAIL
NO SCALE

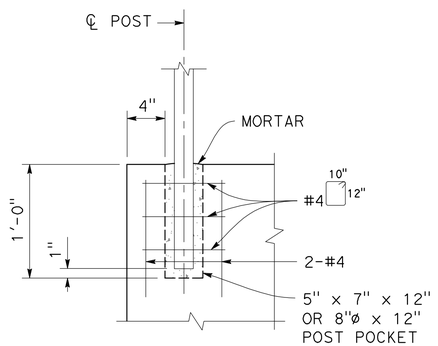

END POST POCKET DETAIL
NO SCALE

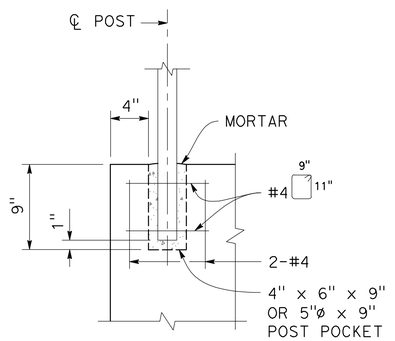

INTERMEDIATE POST POCKET DETAIL
NO SCALE

NOTES:

1. For typical pedestrian bridge railing notes and for location of details, see "CABLE PEDESTRIAN RAILING DETAILS No. 1" sheet.
2. Cables must be spliced with turnbuckles spaced no more than 200 ft and not less than 50ft. turnbuckle must have minimum 1½" of adjustment and a minimum breaking load of 3500 lbs.
3. Submit cable product and fittings to engineer for review and approval. End fork connection plate dimensions to be adjusted to suit selected end fork product. Provide final dimensions when submitting fitting details.

DRAFT - NOT FOR CONSTRUCTION

DESIGN OVERSIGHT			PREPARED FOR THE STATE OF CALIFORNIA DEPARTMENT OF TRANSPORTATION	M. MOORE PROJECT ENGINEER	BRIDGE No. N/A
SIGN OFF DATE	DESIGN: BY T. FAIR	CHECKED J. SAMPSON			POST MILE N/A
	DETAILS: BY J. VALENZUELA	CHECKED J. SAMPSON			RETAINING WALL No. 114
	QUANTITIES: BY X	CHECKED X			CABLE PEDESTRIAN RAILING (TYPE 1) DETAILS No. 2

STRUCTURES DESIGN DETAIL SHEET (ENGLISH) (REVISION 8/16/2021)
DATE PLOTTED => 3/24/2025 TIME PLOTTED => 8:08 AM
FILE => RW114_09_CRDT2.dwg USERNAME => JVALENZUELA
ORIGINAL SCALE IN INCHES FOR REDUCED PLANS 0 1 2 3
PROJECT NUMBER & PHASE: 05200000831
COUNTY/ROUTE: SCR/1 CONTRACT No.: 05-0C734
DISREGARD PRINTS BEARING EARLIER REVISION DATES
REVISION DATES
SHEET 9 OF 12